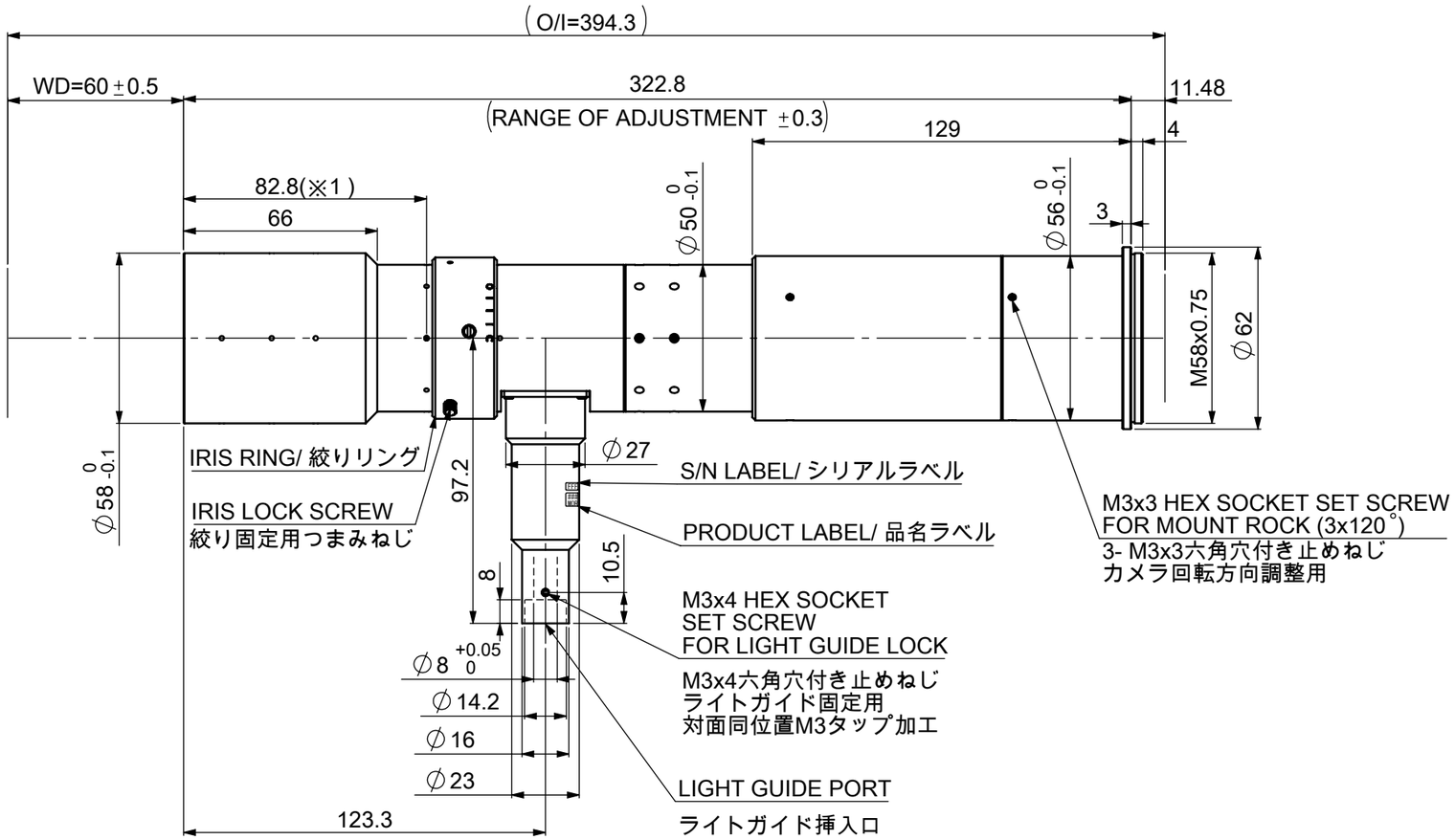

MAGNIFICATION : 5x
EFFECTIVE Fno : 14.7 - 22

※1 DO NOT HOLD THIS AREA / 保持不可範囲

Model Name : MML5-HR60DVI-43M58
MORITEX CORPORATION