STRAIGHTNESS & FLATNESS TOLERANCE	CLASS	NOMINAL LENGTH					
		L ≤ 10	10 < L ≤ 30	30 < L ≤ 100	100 < L ≤ 300	300 < L ≤ 1000	1000 < L ≤ 3000
	H	±0.02	±0.05	±0.1	±0.2	±0.3	±0.4
	K	±0.05	±0.1	±0.2	±0.4	±0.6	±0.8

PERPENDICULARITY TOLERANCE	CLASS	NOMINAL LENGTH ON SHORTER SIDE			
		L ≤ 100	100 < L ≤ 300	300 < L ≤ 1000	1000 < L ≤ 3000
	H	±0.2	±0.3	±0.4	±0.5
	K	±0.4	±0.6	±0.8	±1.0

Absolute Max. Rating / 最大定格	DC24V
Total Power / 消費電力合計	5.7W 1
Mass / 質量	200g 1

M12 Male Connector

Ref. Drawing	No	Assign	Wire Color
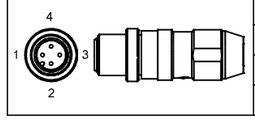	1	+V	Red/Brown
	2	NC	
	3	-V	Black/Blue
	4	NC	

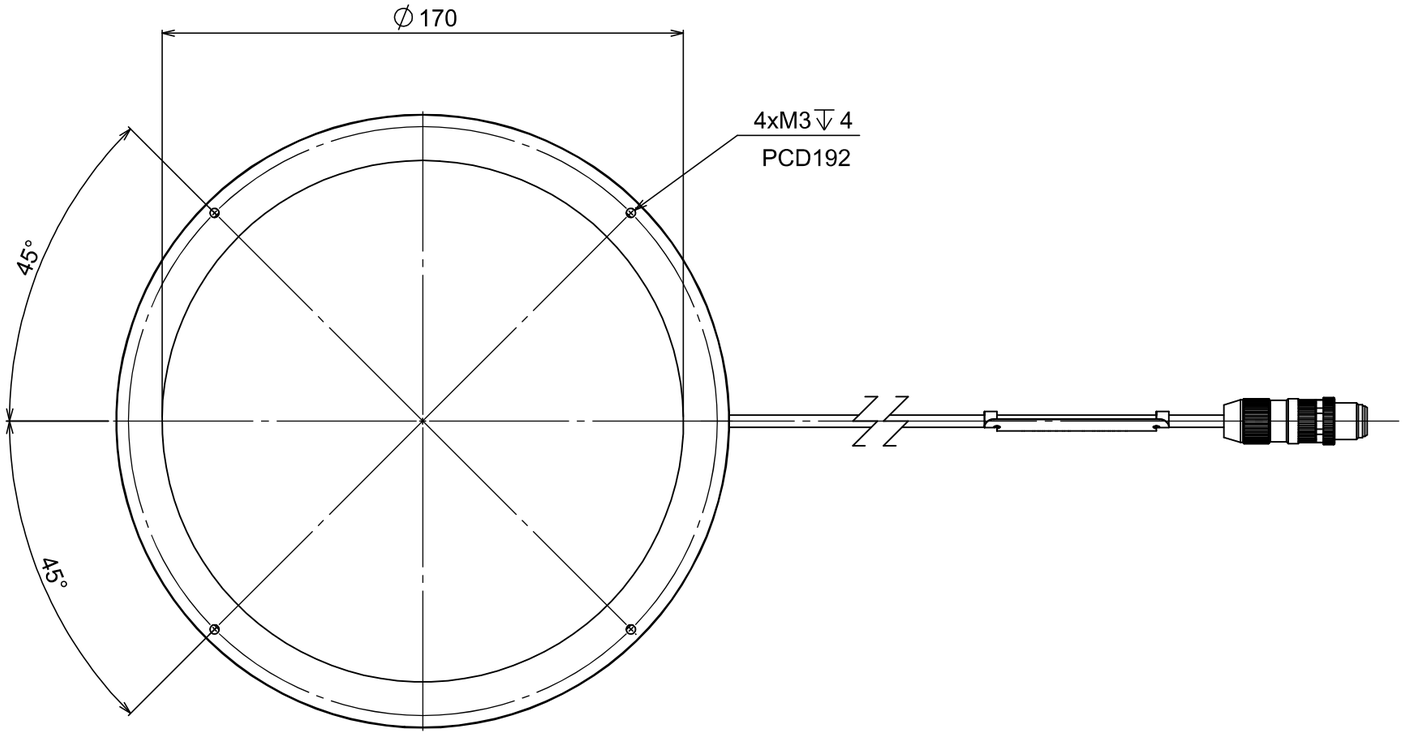

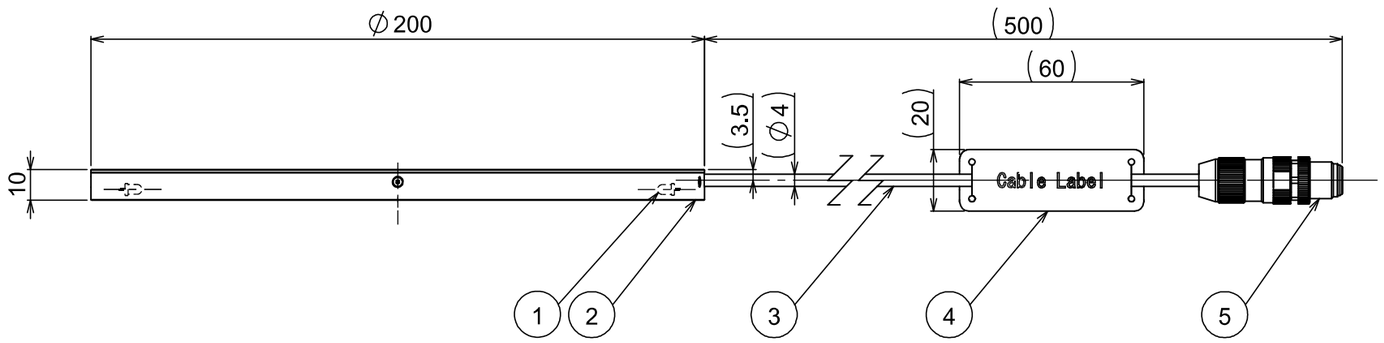

NO.	PART DESCRIPTION	MODEL NUMBER	QU.	NOTE
6				
5	CONNECTOR	M12 MALE CONNECTOR	1	
4	CABLE LABEL		1	
3	CABLE		1	
2	HOUSING		1	Aluminium Alloy / Glass Bead Blasted Black Anodizing
1	LED(RED)		132	

MARK	COM-REV	DATE(YMD)	CHANGE	SIGNATURE
x				
x				
x				
x2	A-002	2026.Apr.08	Change Power, Add Mass	Tatsu
	A-001	2024.Oct.02	NEW	-

DESIGNED	DRAWN	CHECKED	APPROVED
Tatsu	Okazaki	モリテックス '26.04.13 秋元	モリテックス '26.04.13 達

FINISH	-
SURFACE	-
MATERIAL	-
CHAMFER	-
TOLERANCE CLASS	-
SCALE	1:2

UNIT:mm

MORITEX
A Cognex Company

MODEL NAME
CV-RLA-200X170-00R-M12
(IMC-RLA-200X170R-M)

PART NAME
OUTLINE DRAWING

DRAWING NO. A21799A0100801A-002

SHEET 1/1

| STANDARD DIMENSION RANGE | | | | |