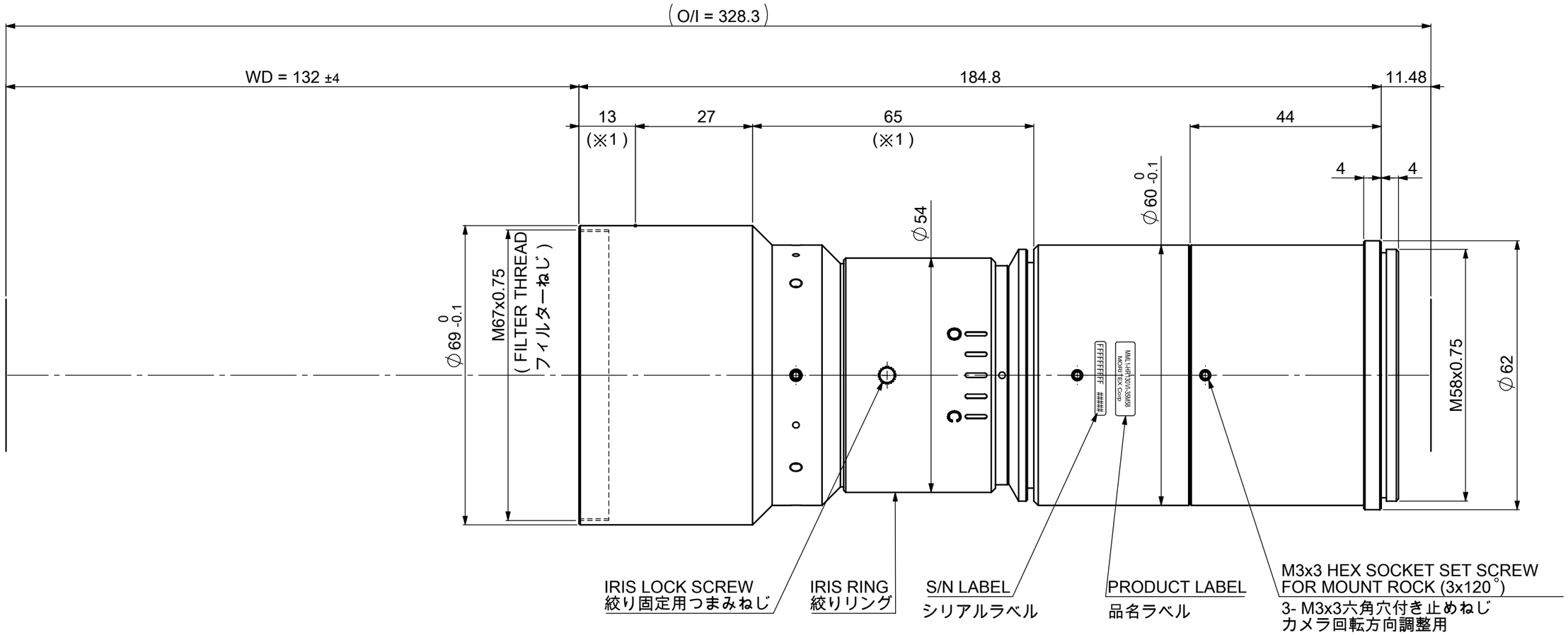

MAGNIFICATION : 1x
EFFECTIVE Fno : 6.5 - 22

※1 DO NOT HOLD THIS AREA / 保持不可範囲

Model Name : MML1-HR130VI-35M58
MORITEX CORPORATION