STRAIGHTNESS & FLATNESS TOLERANCE CLASS	NOMINAL LENGTH L ≤ 10	10 < L ≤ 30	30 < L ≤ 100	100 < L ≤ 300	300 < L ≤ 1000	1000 < L ≤ 3000
H	±0.02	±0.05	±0.1	±0.2	±0.3	±0.4
K	±0.05	±0.1	±0.2	±0.4	±0.6	±0.8

PERPENDICULARITY TOLERANCE CLASS	NOMINAL LENGTH ON SHORTER SIDE L ≤ 100	100 < L ≤ 300	300 < L ≤ 1000	1000 < L ≤ 3000
H	±0.2	±0.3	±0.4	±0.5
K	±0.4	±0.6	±0.8	±1.0

LENGTH OF SHORTER SIDE OF ANGLE	L ≤ 10	10 < L ≤ 50	50 < L ≤ 120	120 < L ≤ 400	400 < L
ANGLE TOLERANCE f	±1°	±30' (±0.5°)	±20' (±0.333°)	±10' (±0.166°)	±5' (±0.083°)
ANGLE TOLERANCE m					

ORIGINAL SHEET FORMAT SIZE : A3

STANDARD DIMENSION RANGE	L < 0.2	0.2 ≤ L ≤ 0.5	0.5 < L ≤ 3	3 < L ≤ 6	6 < L
CHAMFER TOLERANCE f	IN DRW.	±0.1	±0.2	±0.5	±1.0
CHAMFER TOLERANCE m					

STANDARD DIMENSION RANGE	6 < L ≤ 30	30 < L ≤ 120	120 < L ≤ 400	400 < L ≤ 1000
LENGTH TOLERANCE f	±0.1	±0.15	±0.2	±0.3
LENGTH TOLERANCE m	±0.2	±0.3	±0.5	±0.8

Absolute Max. Rating / 最大定格	DC 24V
Total Power / 消費電力合計	4.6W
Mass / 質量	-

M12 Male Connector

Ref. Drawing	No	Assign	Wire Color
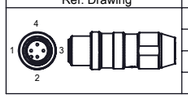	1	+V	Red/Brown
	2	NC	
	3	-V	Black/Blue
	4	NC	

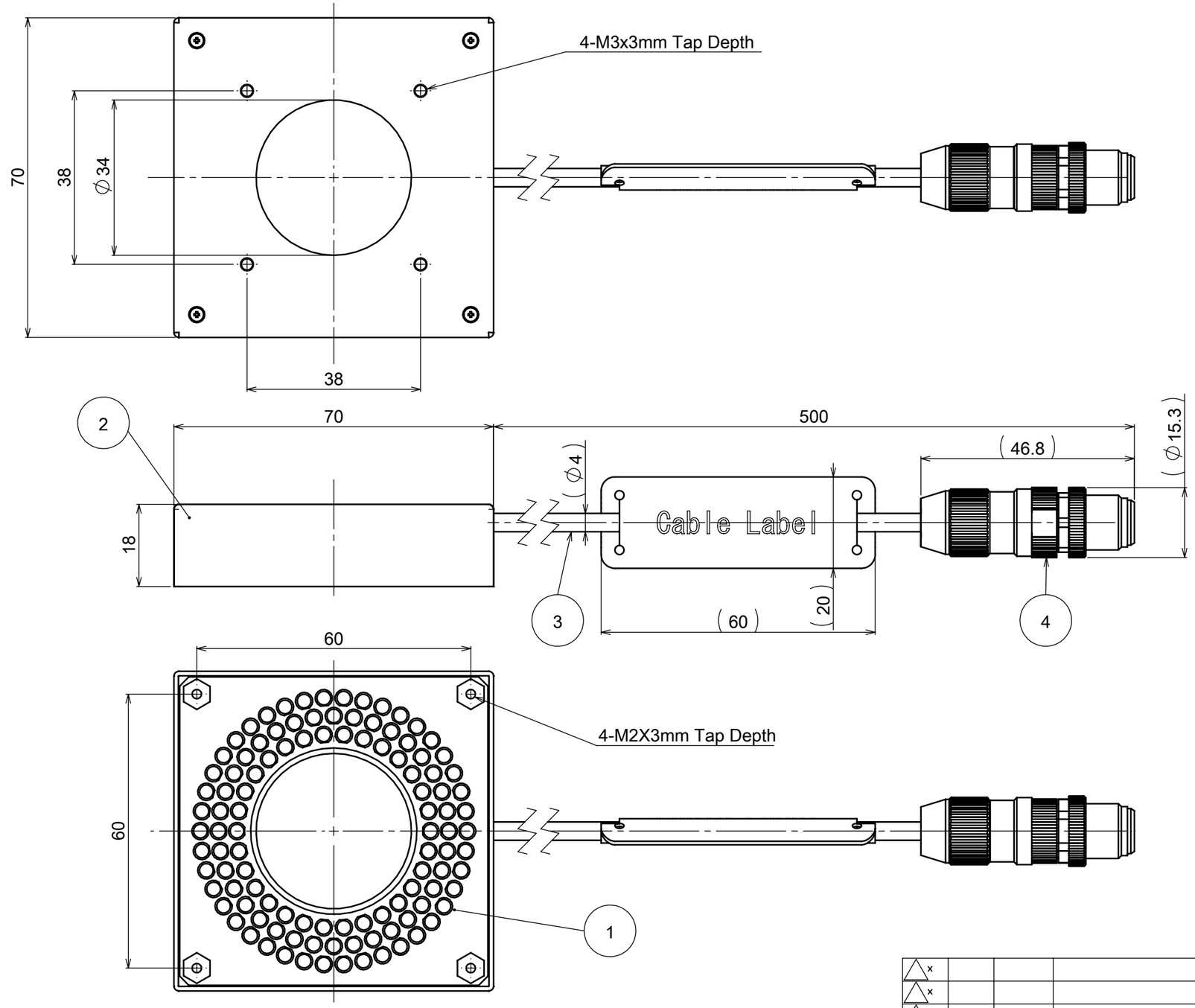

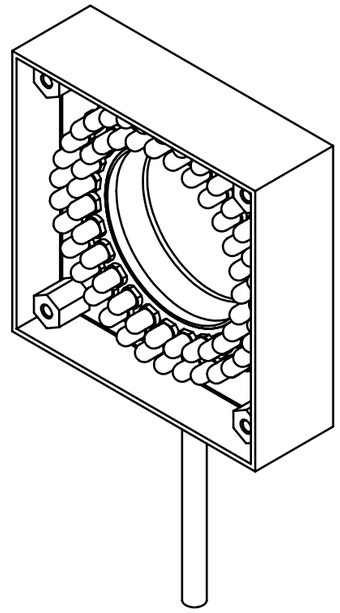

[Perspective View]

NO.	PART DESCRIPTION	MODEL NUMBER	QU.	NOTE
6				
5				
4	CONNECTOR	M12 MALE CONNECTOR	1	
3	CABLE		1	
2	HOUSING		1	Aluminium Alloy/Mat Black Anodizing
1	LED(Blue)		-	

MARK	COM-REV	DATE(YMD)	CHANGE	SIGNATURE
x				
x				
x				
x				
x	A-001	2020.Apr.18	New	-

DESIGNED	DRAWN	CHECKED	APPROVED
xianghui liu	xianghui liu	Yong	

FINISH -
SURFACE -
MATERIAL -
CHAMFER -
TOLERANCE CLASS -
SCALE 1:1

UNIT:mm

MORITEX
Vision Creating Value

MODEL NAME: CV-SQ-70X70X34B-M12

PART NAME: OUTLINE DRAWING

DRAWING NO.: A21832A0100701A-001

SHEET: 1/1

OLD DRAWING NO.