STRAIGHTNESS & FLATNESS TOLERANCE	CLASS	NOMINAL LENGTH					
		L ≤ 10	10 < L ≤ 30	30 < L ≤ 100	100 < L ≤ 300	300 < L ≤ 1000	1000 < L ≤ 3000
	H	±0.02	±0.05	±0.1	±0.2	±0.3	±0.4
	K	±0.05	±0.1	±0.2	±0.4	±0.6	±0.8

PERPENDICULARITY TOLERANCE	CLASS	NOMINAL LENGTH ON SHORTER SIDE			
		L ≤ 100	100 < L ≤ 300	300 < L ≤ 1000	1000 < L ≤ 3000
	H	±0.2	±0.3	±0.4	±0.5
	K	±0.4	±0.6	±0.8	±1.0

ANGLE TOLERANCE	CLASS	LENGTH OF SHORTER SIDE OF ANGLE				
		L ≤ 10	10 < L ≤ 50	50 < L ≤ 120	120 < L ≤ 400	400 < L
	f	±1°	±30' (±0.5°)	±20' (±0.333°)	±10' (±0.166°)	±5' (±0.083°)
	m					

CHAMFER TOLERANCE	CLASS	STANDARD DIMENSION RANGE				
		L < 0.2	0.2 ≤ L ≤ 0.5	0.5 < L ≤ 3	3 < L ≤ 6	6 < L
	f	IN DRW.	±0.1	±0.2	±0.5	±1.0
	m					

LENGTH TOLERANCE	CLASS	STANDARD DIMENSION RANGE					
		L < 0.2	0.2 ≤ L ≤ 6	6 < L ≤ 30	30 < L ≤ 120	120 < L ≤ 400	400 < L ≤ 1000
	f	IN DRW.	±0.05	±0.1	±0.15	±0.2	±0.3
	m		±0.1	±0.2	±0.3	±0.5	±0.8

ORIGINAL SHEET FORMAT SIZE : A3

Absolute Max. Rating / 最大定格	DC 24V
Total Power / 消費電力合計	2.7W
Mass / 質量	-

M12 MALE CONNECTOR

REF DRAWING	Pin No	Assign	WIRE COLOR INSIDE
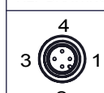	1	+V	RED/BROWN
	2		
	3	-V	BLACK/BLUE)
	4		

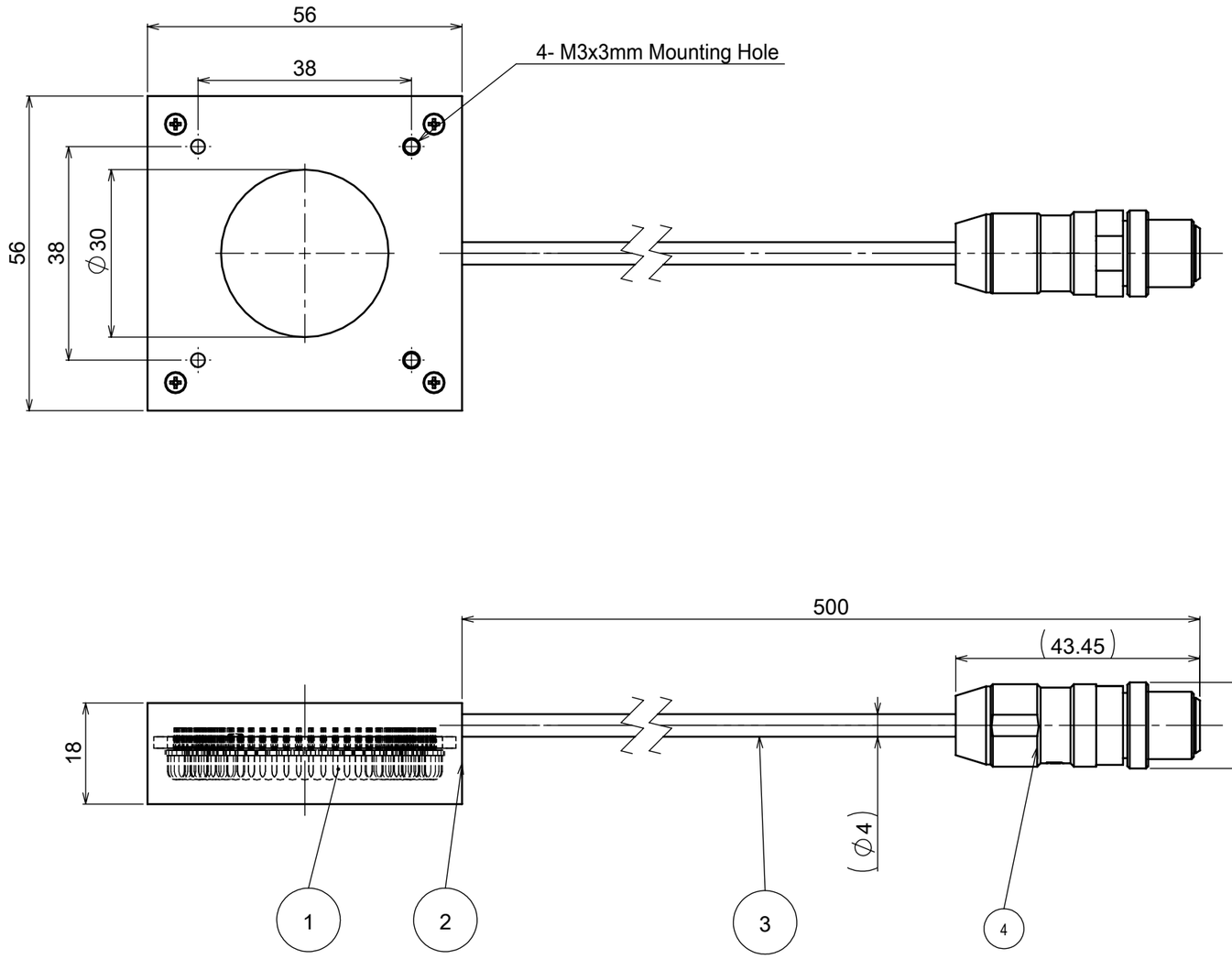

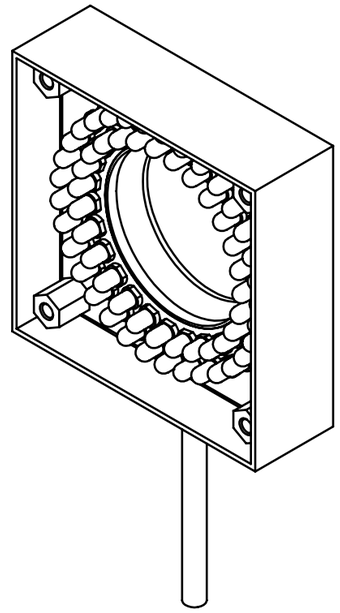

[Perspective View]

NO.	PART DESCRIPTION	MODEL NUMBER	QU.	NOTE
6				
5				
4	CONNECTOR	M12 MALE CONNECTOR	1	
3	CABLE		1	
2	HOUSING		1	Aluminium Alloy/Mat Black Anodizing
1	LED(White)		60	

MARK	COM-REV	DATE(YMD)	CHANGE	SIGNATURE
x				
x				
x				
x				
x	A-001	2019/Oct.18	New	-

DESIGNED	DRAWN	CHECKED	APPROVED
xianghui liu	xianghui liu	Yong	

FINISH	-
SURFACE	-
MATERIAL	-
CHAMFER	-
TOLERANCE CLASS	-
SCALE	1:2

UNIT:mm

MORITEX
Vision Creating Value

MODEL NAME: CV-SQ-56X56X30W-M12

PART NAME: OUTLINE DRAWING

DRAWING NO.: A21794A0100901A-001

SHEET: 1/1

OLD DRAWING NO.