STRAIGHTNESS & FLATNESS TOLERANCE	CLASS	NOMINAL LENGTH					
		L ≤ 10	10 < L ≤ 30	30 < L ≤ 100	100 < L ≤ 300	300 < L ≤ 1000	1000 < L ≤ 3000
	H	±0.02	±0.05	±0.1	±0.2	±0.3	±0.4
	K	±0.05	±0.1	±0.2	±0.4	±0.6	±0.8

PERPENDICULARITY TOLERANCE	CLASS	NOMINAL LENGTH ON SHORTER SIDE			
		L ≤ 100	100 < L ≤ 300	300 < L ≤ 1000	1000 < L ≤ 3000
	H	±0.2	±0.3	±0.4	±0.5
	K	±0.4	±0.6	±0.8	±1.0

Absolute Max. Rating / 最大定格	DC 24V
Total Power / 消費電力合計	1.0W
Mass / 質量	-

M12 MALE CONNECTOR

REF DRAWING	Pin No	Assign	WIRE COLOR INSIDE
	1	+V	RED/BROWN
	2		
	3	-V	BLACK/BLUE)
	4		

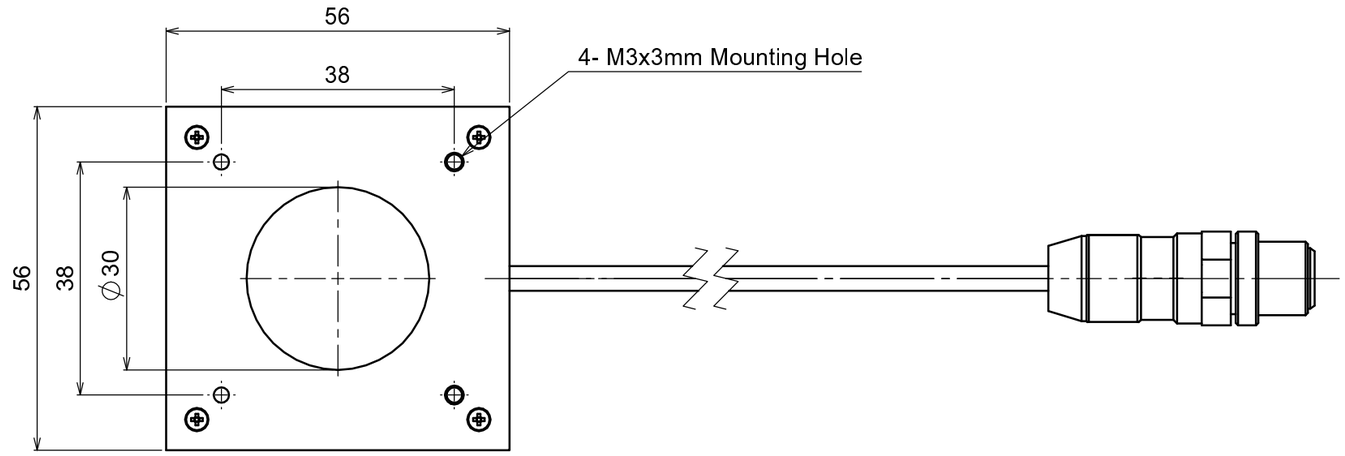

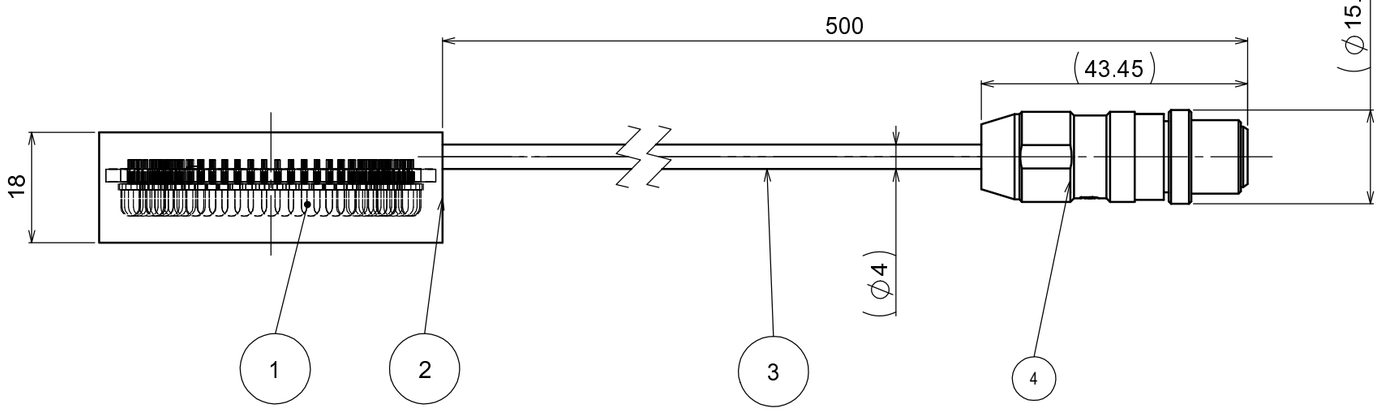

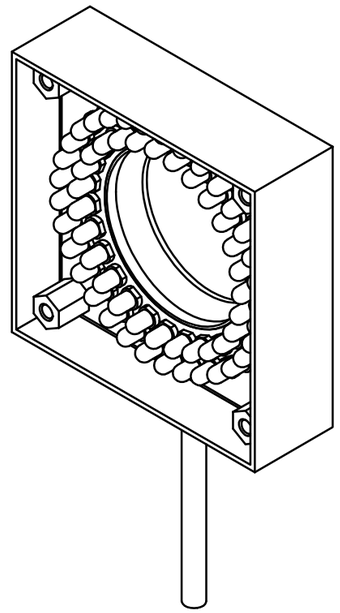

[Perspective View]

MARK	COM-REV	DATE(YMD)	CHANGE	SIGNATURE
x				
x				
x				
x				
x	A-001	2022.Nov.22	New	-

DESIGNED	DRAWN	CHECKED	APPROVED
Yong Peng	Yong Peng	刘向辉	张丽萍

FINISH	-
SURFACE	-
MATERIAL	-
CHAMFER	-
TOLERANCE CLASS	-
SCALE	1:2

UNIT:mm

MORITEX
Vision Creating Value

MODEL NAME: CV-SQ-56X56X30R-M12

PART NAME: OUTLINE DRAWING

DRAWING NO.: A21794A0101101A-001

SHEET: 1/1

NO.	PART DESCRIPTION	MODEL NUMBER	QU.	NOTE
6				
5				
4	CONNECTOR	M12 MALE CONNECTOR	1	
3	CABLE		1	
2	HOUSING		1	Aluminium Alloy/Mat Black Anodizing
1	LED(RED)		60	

OLD DRAWING NO. .

ORIGINAL SHEET FORMAT SIZE : A3

STANDARD DIMENSION RANGE: L < 0.2 | 0.2 ≤ L ≤ 6 | 6 < L ≤ 30 | 30 < L ≤ 120 | 120 < L ≤ 400 | 400 < L ≤ 1000

CLASS f: IN DRW. | ±0.05 | ±0.1 | ±0.2 | ±0.5 | ±0.3 | ±0.8

CLASS m: IN DRW. | ±0.1 | ±0.2 | ±0.5 | ±0.15 | ±0.3 | ±1.0

CHAMFER TOLERANCE

STANDARD DIMENSION RANGE: L < 0.2 | 0.2 ≤ L ≤ 0.5 | 0.5 < L ≤ 3 | 3 < L ≤ 6 | 6 < L

CLASS f: IN DRW. | ±0.1 | ±0.2 | ±0.5 | ±1.0

CLASS m: ±1.0 | ±0.5 | ±0.2 | ±0.1 | ±0.05

LENGTH TOLERANCE

LENGTH OF SHORTER SIDE OF ANGLE: L ≤ 10 | 10 < L ≤ 50 | 50 < L ≤ 120 | 120 < L ≤ 400 | 400 < L

CLASS f: ±1° | ±30' (±0.5°) | ±20' (±0.333°) | ±10' (±0.166°) | ±5' (±0.083°)

CLASS m: ±1° | ±30' (±0.5°) | ±20' (±0.333°) | ±10' (±0.166°) | ±5' (±0.083°)

ANGLE TOLERANCE