STRAIGHTNESS & FLATNESS TOLERANCE	CLASS	NOMINAL LENGTH					
		L ≤ 10	10 < L ≤ 30	30 < L ≤ 100	100 < L ≤ 300	300 < L ≤ 1000	1000 < L ≤ 3000
	H	±0.02	±0.05	±0.1	±0.2	±0.3	±0.4
	K	±0.05	±0.1	±0.2	±0.4	±0.6	±0.8

PERPENDICULARITY TOLERANCE	CLASS	NOMINAL LENGTH ON SHORTER SIDE			
		L ≤ 100	100 < L ≤ 300	300 < L ≤ 1000	1000 < L ≤ 3000
	H	±0.2	±0.3	±0.4	±0.5
	K	±0.4	±0.6	±0.8	±1.0

Absolute Max. Rating / 最大定格	DC24V
Total Power / 消費電力合計	2W
Mass / 質量	-

M12 Male Connector

Ref. Drawing

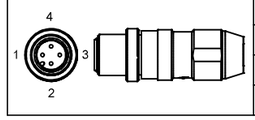

No	Assign	Wire Color
1	+V	Red/Brown
2	NC	
3	-V	Black/Blue
4	NC	

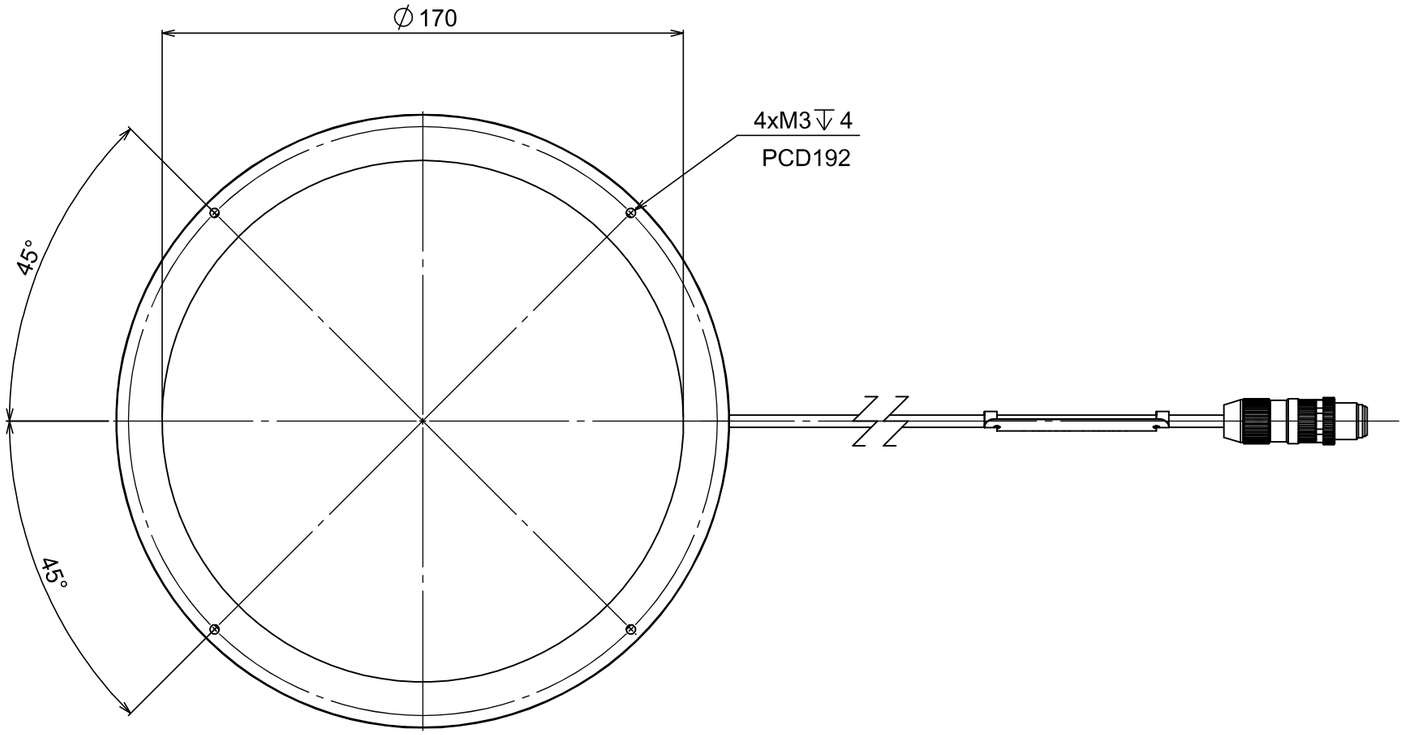

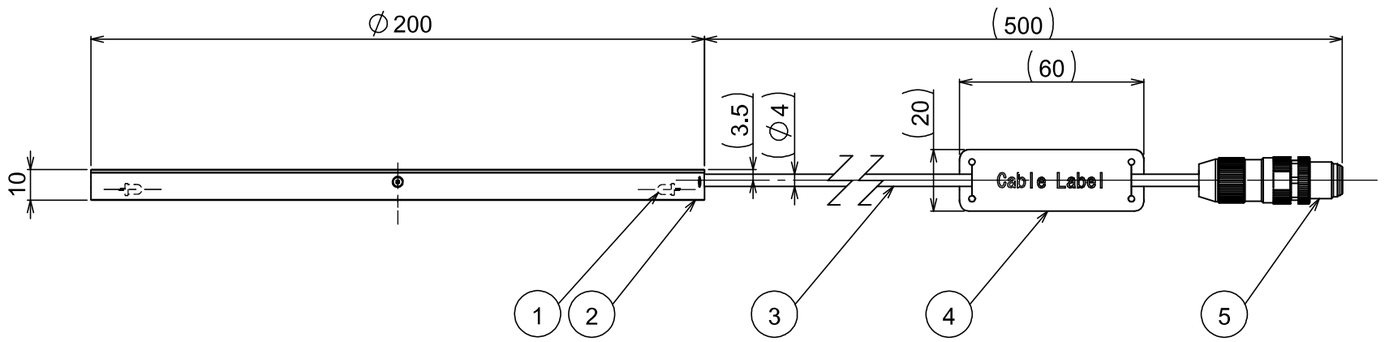

NO.	PART DESCRIPTION	MODEL NUMBER	QU.	NOTE
6				
5	CONNECTOR	M12 MALE CONNECTOR	1	
4	CABLE LABEL		1	
3	CABLE		1	
2	HOUSING		1	Aluminium Alloy / Glass Bead Blasted Black Anodizing
1	LED(RED)		132	

MARK	COM-REV	DATE(YMD)	CHANGE	SIGNATURE
1	A-001	2024.Oct.02	NEW	-

DESIGNED	DRAWN	CHECKED	APPROVED
Tatsu	Okazaki	モリテックス '24.10.03 土門	モリテックス '24.10.04 達

FINISH: -
SURFACE: -
MATERIAL: -
CHAMFER: -
TOLERANCE CLASS: -
SCALE: 1:2

UNIT:mm

MORITEX
A Cognex Company

MODEL NAME: CV-RLA-200X170-00R-M12
(IMC-RLA-200X170R-M)

PART NAME: OUTLINE DRAWING

DRAWING NO.: A21799A0100801A-001

SHEET: 1/1

OLD DRAWING NO.

CLASS	LENGTH OF SHORTER SIDE OF ANGLE					
	L ≤ 10	10 < L ≤ 50	50 < L ≤ 120	120 < L ≤ 400	400 < L	
f	±1°	±30' (±0.5°)	±20' (±0.333°)	±10' (±0.166°)	±5' (±0.083°)	
m						

ANGLE TOLERANCE

ORIGINAL SHEET FORMAT SIZE : A3

CLASS	STANDARD DIMENSION RANGE					
	L < 0.2	0.2 ≤ L ≤ 0.5	0.5 < L ≤ 3	3 < L ≤ 6	6 < L	
f	IN DRW.	±0.1	±0.2	±0.5	±1.0	
m						

CHAMFER TOLERANCE

CLASS	STANDARD DIMENSION RANGE					
	L < 0.2	0.2 ≤ L ≤ 6	6 < L ≤ 30	30 < L ≤ 120	120 < L ≤ 400	400 < L ≤ 1000
f	IN DRW.	±0.05	±0.1	±0.1	±0.2	±0.3
m		±0.1	±0.2	±0.3	±0.5	±0.8

LENGTH TOLERANCE