STRAIGHTNESS & FLATNESS TOLERANCE	CLASS	NOMINAL LENGTH					
		L ≤ 10	10 < L ≤ 30	30 < L ≤ 100	100 < L ≤ 300	300 < L ≤ 1000	1000 < L ≤ 3000
	H	±0.02	±0.05	±0.1	±0.2	±0.3	±0.4
	K	±0.05	±0.1	±0.2	±0.4	±0.6	±0.8

PERPENDICULARITY TOLERANCE	CLASS	NOMINAL LENGTH ON SHORTER SIDE			
		L ≤ 100	100 < L ≤ 300	300 < L ≤ 1000	1000 < L ≤ 3000
	H	±0.2	±0.3	±0.4	±0.5
	K	±0.4	±0.6	±0.8	±1.0

Absolute Max. Rating / 最大定格	DC24V
Total Power / 消費電力合計	5.9W
Mass / 質量	-

M12 Male Connector

Ref. Drawing	No	Assign	Wire Color
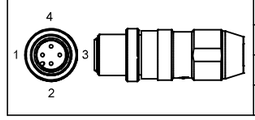	1	+V	Red/Brown
	2	NC	
	3	-V	Black/Blue
	4	NC	

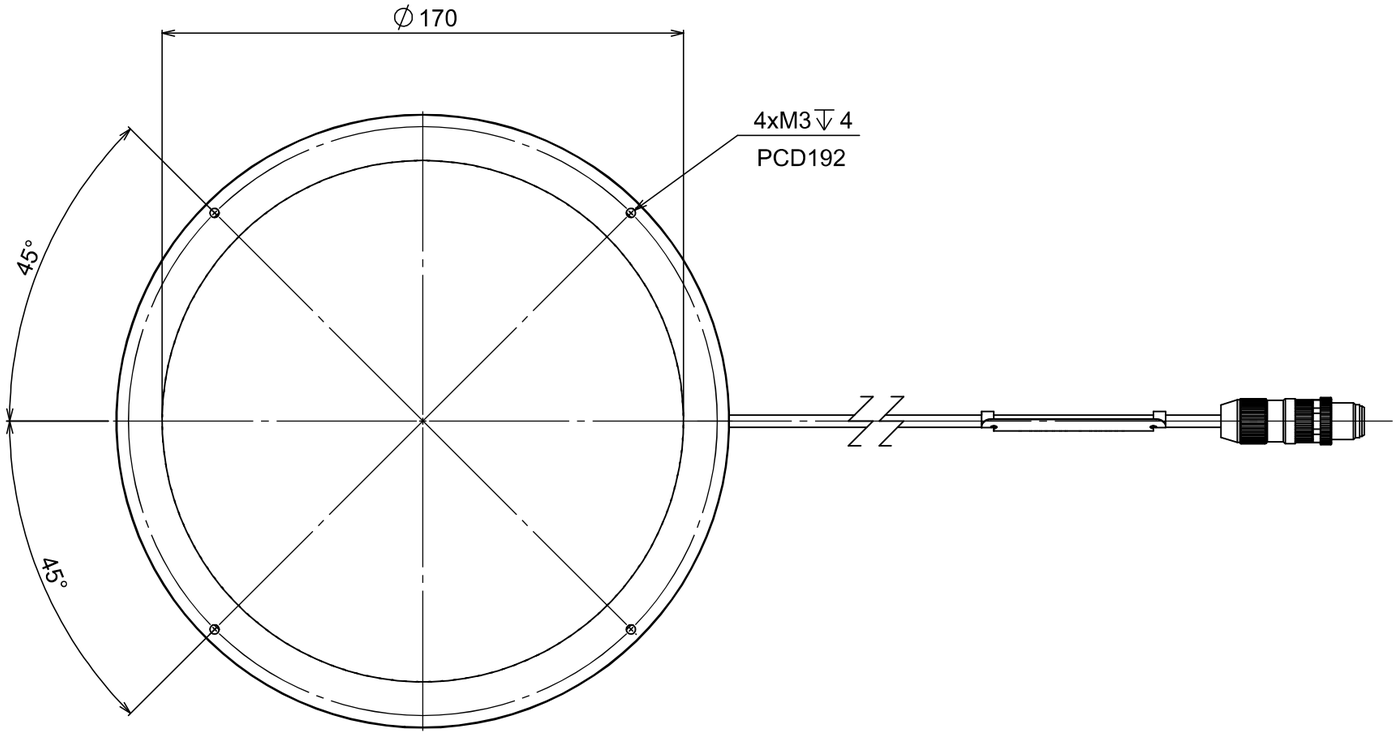

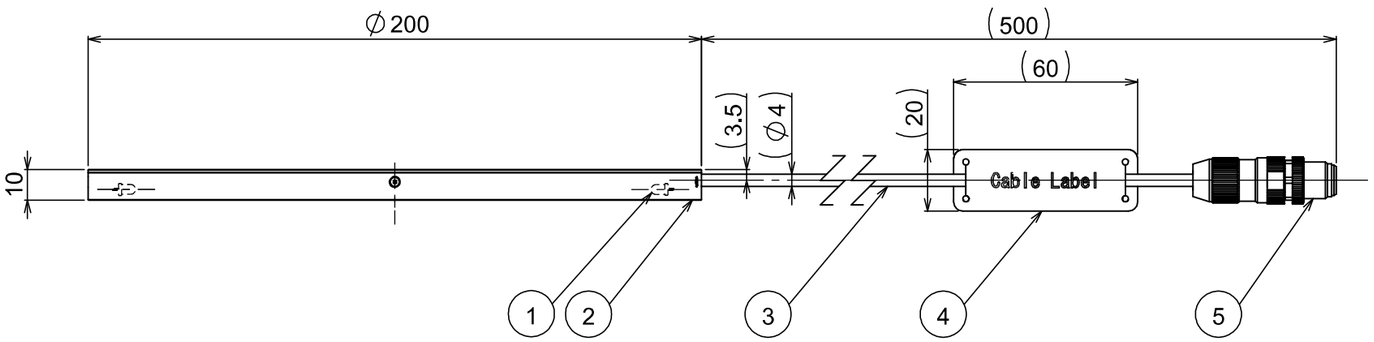

6					
5	CONNECTOR	M12 MALE CONNECTOR	1		
4	CABLE LABEL		1		
3	CABLE		1		
2	HOUSING		1	Aluminium Alloy / Glass Bead Blasted Black Anodizing	
1	LED(BLUE)		132		
NO.	PART DESCRIPTION	MODEL NUMBER	QU.	NOTE	

MARK	COM-REV	DATE(YMD)	CHANGE	SIGNATURE
	A-001	2024.Sep.27	NEW	-

DESIGNED	DRAWN	CHECKED	APPROVED
Tatsu	Okazaki	モリテックス '24.10.03 土門	モリテックス '24.10.03 達

FINISH -
SURFACE -
MATERIAL -
CHAMFER -
TOLERANCE CLASS -
SCALE 1:2

UNIT:mm

MORITEX
A Cognex Company

MODEL NAME
CV-RLA-200X170-00B-M12
(IMC-RLA-200X170B-M)

PART NAME
OUTLINE DRAWING

DRAWING NO. A21799A0100701A-001

SHEET 1/1

ORIGINAL SHEET FORMAT SIZE : A3

OLD DRAWING NO.