| STRAIGHTNESS & FLATNESS TOLERANCE | CLASS | NOMINAL LENGTH L ≤ 10 | 10 < L ≤ 30 | 30 < L ≤ 100 | 100 < L ≤ 300 | 300 < L ≤ 1000 | 1000 < L ≤ 3000 |
|---|---|---|---|---|---|---|---|
| | H | ±0.02 | ±0.05 | ±0.1 | ±0.2 | ±0.3 | ±0.4 |
| | K | ±0.05 | ±0.1 | ±0.2 | ±0.4 | ±0.6 | ±0.8 |

| PERPENDICULARITY TOLERANCE | CLASS | NOMINAL LENGTH ON SHORTER SIDE L ≤ 100 | 100 < L ≤ 300 | 300 < L ≤ 1000 | 1000 < L ≤ 3000 |
|---|---|---|---|---|---|
| | H | ±0.2 | ±0.3 | ±0.4 | ±0.5 |
| | K | ±0.4 | ±0.6 | ±0.8 | ±1.0 |

| ANGLE TOLERANCE | CLASS | LENGTH OF SHORTER SIDE L ≤ 10 | 10 < L ≤ 50 | 50 < L ≤ 120 | 120 < L ≤ 400 | 400 < L |
|---|---|---|---|---|---|---|
| | f | ±1° | ±30' (±0.5°) | ±20' (±0.333°) | ±10' (±0.166°) | ±5' (±0.083°) |
| | m | | | | | |

| CHAMFER TOLERANCE | CLASS | STANDARD DIMENSION RANGE L < 0.2 | 0.2 ≤ L ≤ 0.5 | 0.5 < L ≤ 3 | 3 < L ≤ 6 | 6 < L |
|---|---|---|---|---|---|---|
| | f | IN DRW. | ±0.1 | ±0.2 | ±0.5 | ±1.0 |
| | m | | | | | |

| LENGTH TOLERANCE | CLASS | STANDARD DIMENSION RANGE L < 0.2 | 0.2 ≤ L ≤ 6 | 6 < L ≤ 30 | 30 < L ≤ 120 | 120 < L ≤ 400 | 400 < L ≤ 1000 |
|---|---|---|---|---|---|---|---|
| | f | IN DRW. | ±0.05 | ±0.1 | ±0.15 | ±0.2 | ±0.3 |
| | m | | ±0.1 | ±0.2 | ±0.3 | ±0.5 | ±0.8 |

ORIGINAL SHEET FORMAT SIZE : A3

| | |
|---|---|
| Absolute Max. Rating / 最大定格 | DC24V |
| Total Power / 消費電力合計 | 6.4W |
| Mass / 質量 | - |

**M12 Male Connector**

| Ref. Drawing | No | Assign | Wire Color |
|---|---|---|---|
| 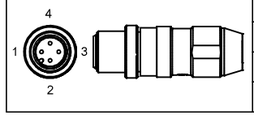 | 1 | +V | Red/Brown |
| | 2 | NC | |
| | 3 | -V | Black/Blue |
| | 4 | NC | |

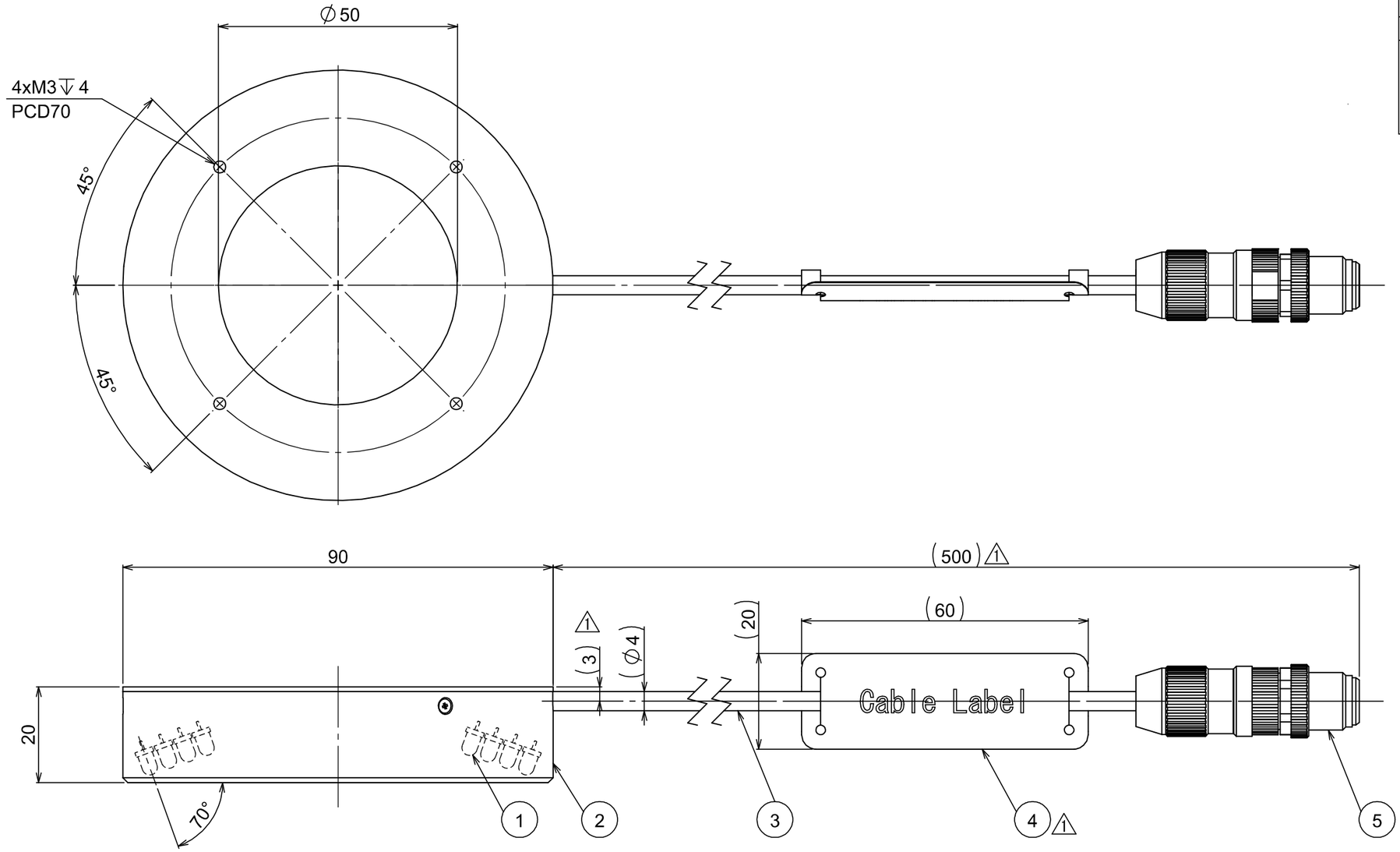


[ PERSPECTIVE VIEW ]

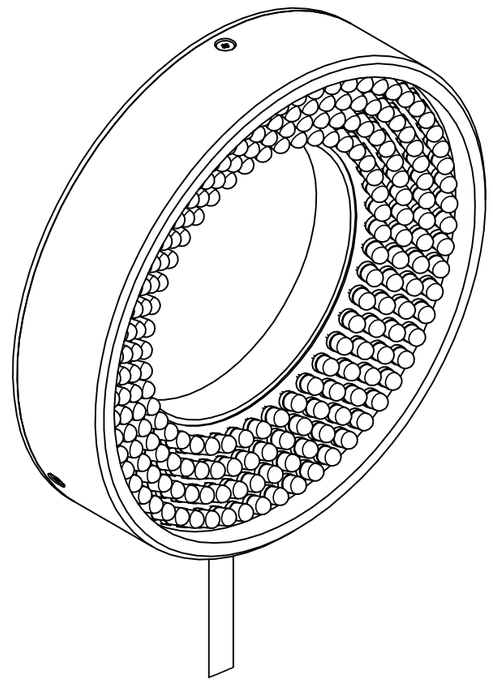

| 1 | NO. | PART DESCRIPTION | MODEL NUMBER | QU. | NOTE |
|---|---|---|---|---|---|
| | 6 | | | | |
| | 5 | CONNECTOR | M12Male | 1 | |
| | 4 | CABLE LABEL | | 1 | |
| | 3 | CABLE | | 1 | |
| | 2 | HOUSING | | 1 | Aluminium Alloy / Glass Bead Blasted Black Anodizing |
| | 1 | LED(WHITE) | | 216 | |

OLD DRAWING NO.

| MARK | COM-REV | DATE(YMD) | CHANGE | SIGNATURE |
|---|---|---|---|---|
| x | | | | |
| x | | | | |
| x | | | | |
| 1 x4 | A-002 | 2025.May.28 | Add Cable Label , etc. | Okazaki |
| | A-001 | 2019.Oct.11 | NEW | - |

| DESIGNED | DRAWN | CHECKED | APPROVED |
|---|---|---|---|
| xianghuiliu | xianghuiliu | モリテックス '25.05.28 土門 | モリテックス '25.05.29 達 |

FINISH -
SURFACE -
MATERIAL -
CHAMFER -
TOLERANCE CLASS -
SCALE 1:1

UNIT:mm

MORITEX
A Cognex Company

MODEL NAME: CV-R-90X50-70W-M12

PART NAME: OUTLINE DRAWING

DRAWING NO. A21791A0100901A-002

SHEET 1/1