STRAIGHTNESS & FLATNESS TOLERANCE	CLASS	NOMINAL LENGTH					
		L ≤ 10	10 < L ≤ 30	30 < L ≤ 100	100 < L ≤ 300	300 < L ≤ 1000	1000 < L ≤ 3000
	H	±0.02	±0.05	±0.1	±0.2	±0.3	±0.4
	K	±0.05	±0.1	±0.2	±0.4	±0.6	±0.8

PERPENDICULARITY TOLERANCE	CLASS	NOMINAL LENGTH ON SHORTER SIDE			
		L ≤ 100	100 < L ≤ 300	300 < L ≤ 1000	1000 < L ≤ 3000
	H	±0.2	±0.3	±0.4	±0.5
	K	±0.4	±0.6	±0.8	±1.0

ANGLE TOLERANCE	CLASS	LENGTH OF SHORTER SIDE OF ANGLE					
		L ≤ 10	10 < L ≤ 50	50 < L ≤ 120	120 < L ≤ 400	400 < L	
	f	±1°	±30' (±0.5°)	±20' (±0.333°)	±10' (±0.166°)	±5' (±0.083°)	
	m						

CHAMFER TOLERANCE	CLASS	STANDARD DIMENSION RANGE					
		L < 0.2	0.2 ≤ L ≤ 0.5	0.5 < L ≤ 3	3 < L ≤ 6	6 < L	
	f	IN DRW.	±0.1	±0.2	±0.5	±1.0	
	m						

LENGTH TOLERANCE	CLASS	STANDARD DIMENSION RANGE					
		L < 0.2	0.2 ≤ L ≤ 6	6 < L ≤ 30	30 < L ≤ 120	120 < L ≤ 400	400 < L ≤ 1000
	f	IN DRW.	±0.05	±0.1	±0.15	±0.2	±0.3
	m		±0.1	±0.2	±0.3	±0.5	±0.8

ORIGINAL SHEET FORMAT SIZE : A3

OLD DRAWING NO.

Absolute Max. Rating / 最大定格	DC24V
Total Power / 消費電力合計	3.5W
Mass / 質量	-

M12 Male Connector

Ref. Drawing	No	Assign	Wire Color
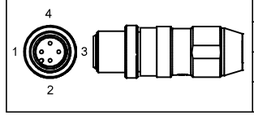	1	+V	Red/Brown
	2	NC	
	3	-V	Black/Blue
	4	NC	

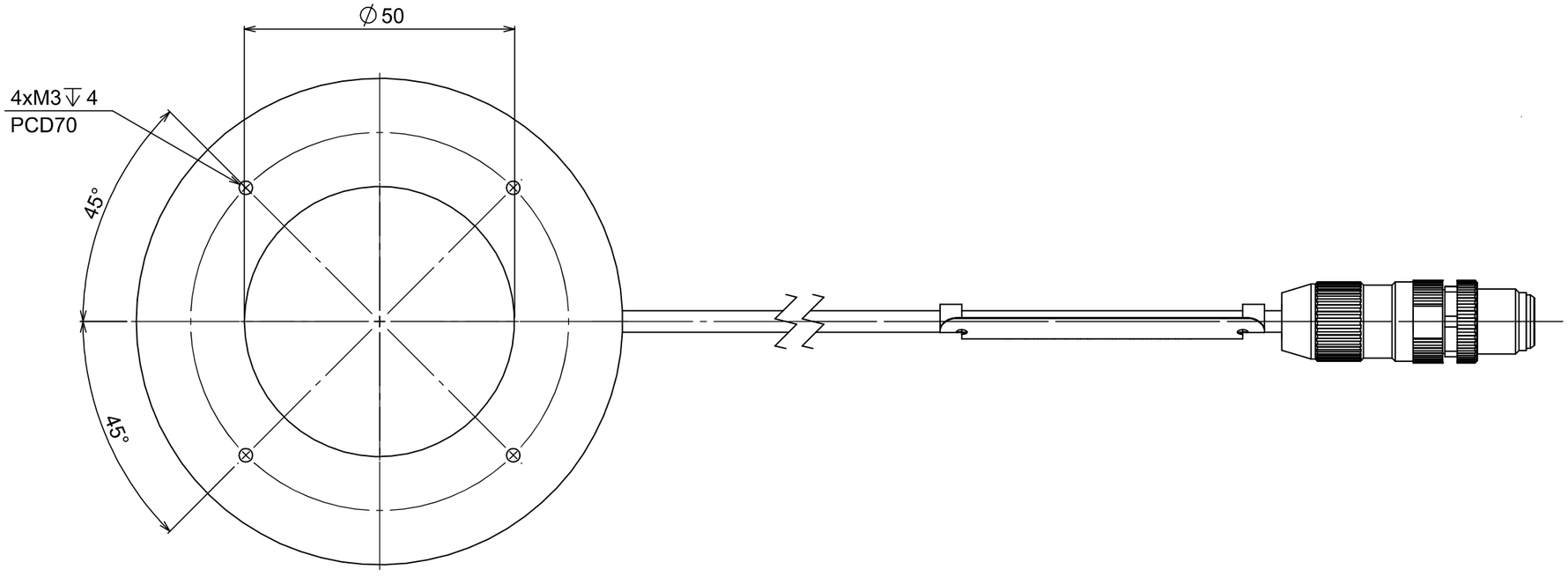

[PERSPECTIVE VIEW]

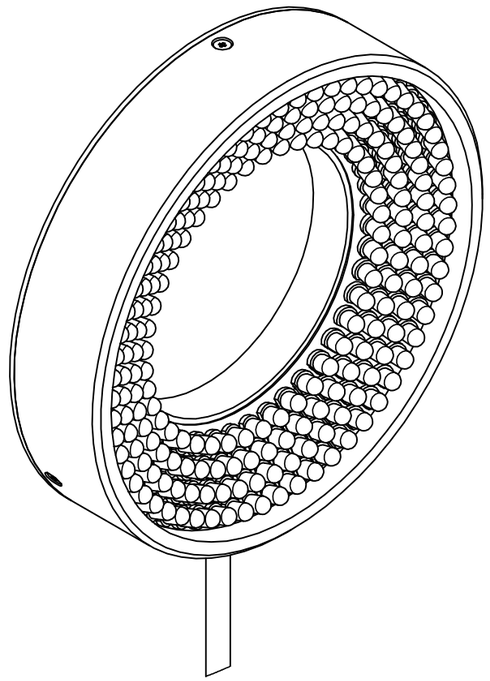

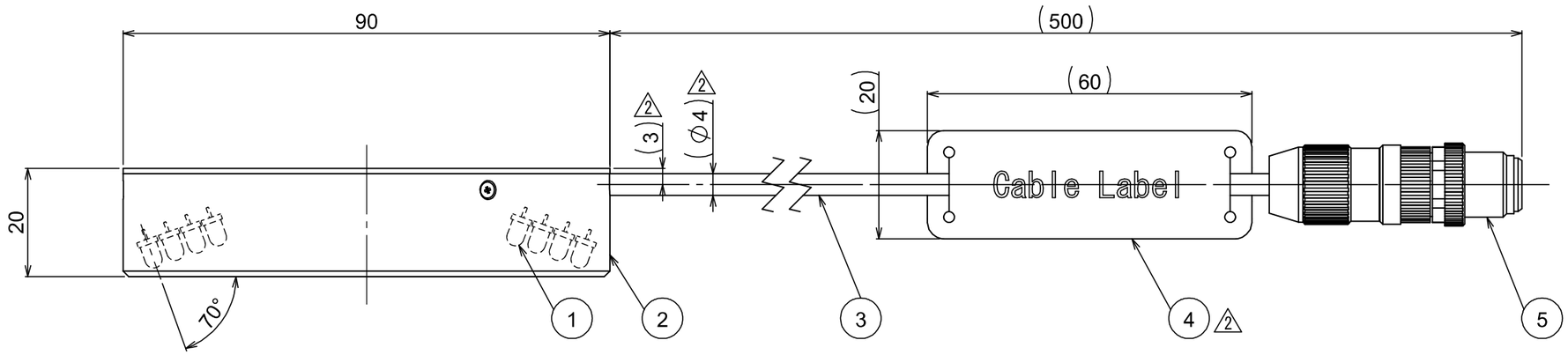

NO.	PART DESCRIPTION	MODEL NUMBER	QU.	NOTE
6				
5	CONNECTOR	M12Male	1	
4	CABLE LABEL		1	
3	CABLE		1	
2	HOUSING		1	Aluminium Alloy / Glass Bead Blasted Black Anodizing
1	LED(RED)		216	

MARK	COM-REV	DATE(YMD)	CHANGE	SIGNATURE
x				
x				
x4	A-002	2025.May.28	Add Cable Label , etc.	Okazaki
x1	A-002	2022.Nov.18	修改功率値	xianghuiliu
	A-001	2022.Mar.26	NEW	-

DESIGNED	DRAWN	CHECKED	APPROVED
xianghuiliu	xianghuiliu	'25.05.29	'25.05.30

FINISH -
SURFACE -
MATERIAL -
CHAMFER -
TOLERANCE CLASS -
SCALE 1:1

UNIT:mm

MORITEX
A Cognex Company

MODEL NAME: CV-R-90X50-70R-M12

PART NAME: OUTLINE DRAWING

DRAWING NO. A21791A0101101A-003

SHEET 1/1