STRAIGHTNESS & FLATNESS TOLERANCE	CLASS	NOMINAL LENGTH					
		L ≤ 10	10 < L ≤ 30	30 < L ≤ 100	100 < L ≤ 300	300 < L ≤ 1000	1000 < L ≤ 3000
	H	±0.02	±0.05	±0.1	±0.2	±0.3	±0.4
	K	±0.05	±0.1	±0.2	±0.4	±0.6	±0.8

PERPENDICULARITY TOLERANCE	CLASS	NOMINAL LENGTH ON SHORTER SIDE			
		L ≤ 100	100 < L ≤ 300	300 < L ≤ 1000	1000 < L ≤ 3000
	H	±0.2	±0.3	±0.4	±0.5
	K	±0.4	±0.6	±0.8	±1.0

Absolute Max. Rating / 最大定格	DC 24V
Total Power / 消費電力合計	5.5W
Mass / 質量	-

M12 MALE CONNECTOR			
REF DRAWING	Pin No	Assign	WIRE COLOR INSIDE
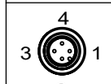	1	+V	RED/BROWN
	2		
	3	-V	BLACK/BLUE)
	4		

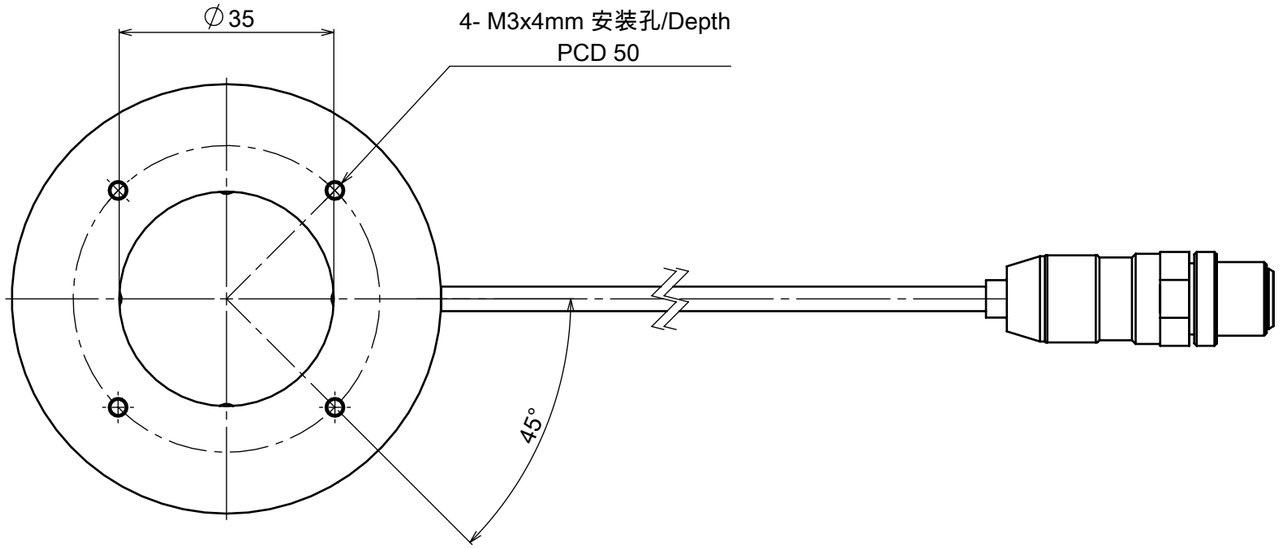

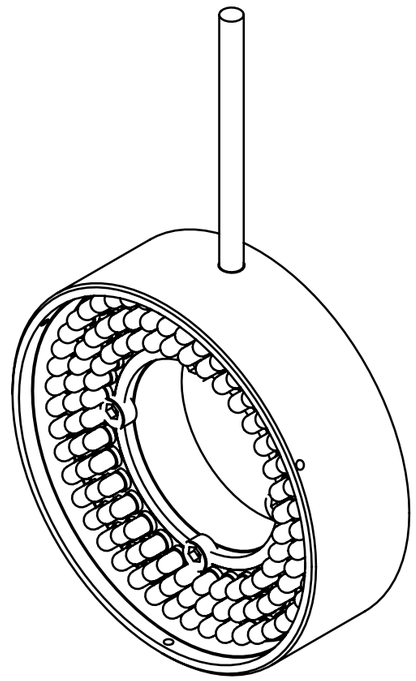

Perspective View

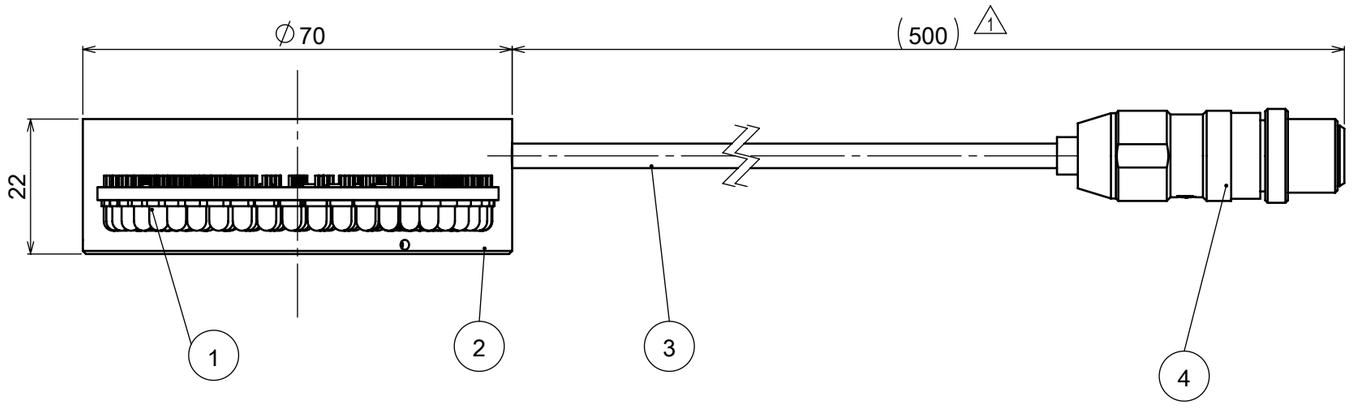

6					
5					
4	CONNECTOR	M12 Male	1		
3	CABLE		1		
2	HOUSING		1		
1	LED(BLUE)		120		
NO.	PART DESCRIPTION	MODEL NUMBER	QU.	NOTE	

MARK	COM-REV	DATE(YMD)	CHANGE	SIGNATURE
x				
x				
x				
1 x1	A-002	2024.Apr.11	更改电线长度	Yong
x	A-001	2022.Oct.27	New	-

DESIGNED	DRAWN	CHECKED	APPROVED
Yong Peng	Yong Peng	刘向辉	李强

FINISH -
SURFACE -
MATERIAL -
CHAMFER -
TOLERANCE CLASS -
SCALE 1:1

UNIT:mm

MORITEX
Vision Creating Value

MODEL NAME
CV-R-70X35-90B-M12

PART NAME
OUTLINE DRAWING

DRAWING NO. A23627A0100201A-002

SHEET 1/1

OLD DRAWING NO.

STANDARD DIMENSION RANGE: L < 0.2 (IN DRW.); 0.2 ≤ L ≤ 0.5: ±0.1; 0.5 < L ≤ 3: ±0.2; 3 < L ≤ 6: ±0.5; 6 < L: ±1.0

STANDARD DIMENSION RANGE: 0.2 ≤ L ≤ 6: ±0.05 (±0.1); 6 < L ≤ 30: ±0.1 (±0.2); 30 < L ≤ 120: ±0.15 (±0.3); 120 < L ≤ 400: ±0.2 (±0.5); 400 < L ≤ 1000: ±0.3 (±0.8)

LENGTH OF SHORTER SIDE OF ANGLE: L ≤ 10: ±1° (CLASS f, m); 10 < L ≤ 50: ±30' (±0.5°); 50 < L ≤ 120: ±20' (±0.333°); 120 < L ≤ 400: ±10' (±0.166°); 400 < L: ±5' (±0.083°)

ORIGINAL SHEET FORMAT SIZE : A3

ANGLE TOLERANCE

CHAMFER TOLERANCE

LENGTH TOLERANCE