STRAIGHTNESS & FLATNESS TOLERANCE	CLASS	NOMINAL LENGTH					
		L ≤ 10	10 < L ≤ 30	30 < L ≤ 100	100 < L ≤ 300	300 < L ≤ 1000	1000 < L ≤ 3000
	H	±0.02	±0.05	±0.1	±0.2	±0.3	±0.4
	K	±0.05	±0.1	±0.2	±0.4	±0.6	±0.8

PERPENDICULARITY TOLERANCE	CLASS	NOMINAL LENGTH ON SHORTER SIDE			
		L ≤ 100	100 < L ≤ 300	300 < L ≤ 1000	1000 < L ≤ 3000
	H	±0.2	±0.3	±0.4	±0.5
	K	±0.4	±0.6	±0.8	±1.0

Absolute Max. Rating / 最大定格	DC24V
Total Power / 消費電力合計	2.8W △1
Mass / 質量	-

M12 Male Connector

Ref. Drawing	No	Assign	Wire Color
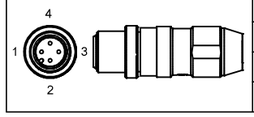	1	+V	Red/Brown
	2	NC	
	3	-V	Black/Blue
	4	NC	

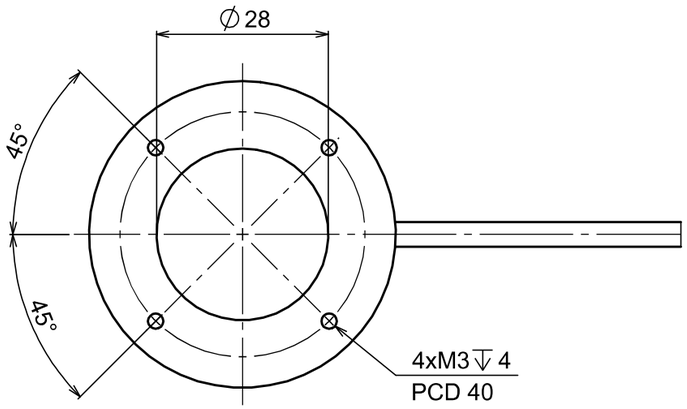

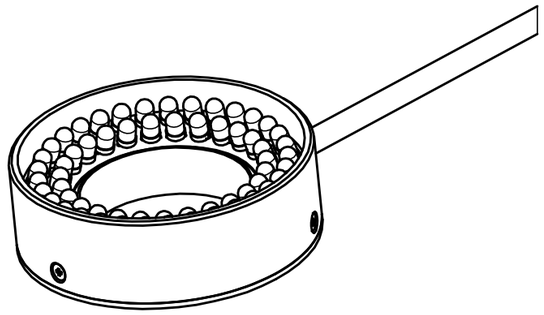

[PERSPECTIVE VIEW]

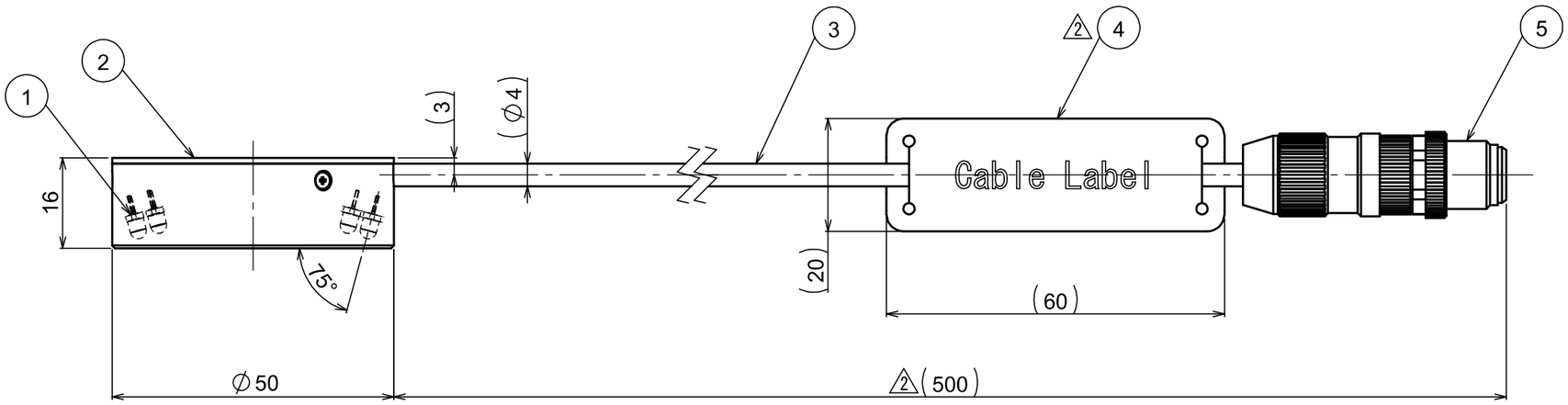

NO.	PART DESCRIPTION	MODEL NUMBER	QU.	NOTE
6				
5	CONNECTOR	M12 Male	1	
4	CABLE LABEL △2		1	
3	CABLE		1	
2	HOUSING		1	Aluminium Alloy / Glass Bead Blasted Black Anodizing △2
1	LED(WHITE)		60	

MARK	COM-REV	DATE(YMD)	CHANGE	SIGNATURE
△x				
△x				
△2 x4	A-003	2025.May.22	Change Logo,dimension,etc.	Suzuki
△1 x1	A-002	2023.Dec.25	修改功率	Yong
△	A-001	2019.Oct.10	NEW	-

DESIGNED	DRAWN	CHECKED	APPROVED
Yong Peng	Yong Peng	モリテックス '25.05.22 十門	モリテックス '25.05.22 達

FINISH -
SURFACE -
MATERIAL -
CHAMFER -
TOLERANCE CLASS -
SCALE 1:1

UNIT:mm

MORITEX
A Cognex Company

MODEL NAME: CV-R-50X28-75W-M12

PART NAME: OUTLINE DRAWING

DRAWING NO.: A21781A0101001A-003

SHEET: 1/1

OLD DRAWING NO.

ORIGINAL SHEET FORMAT SIZE : A3

STANDARD DIMENSION RANGE: L < 0.2 (IN DRW.); 0.2 ≤ L ≤ 0.5 (±0.1); 0.5 < L ≤ 3 (±0.2); 3 < L ≤ 6 (±0.5); 6 < L (±1.0)

STANDARD DIMENSION RANGE: L < 0.2 (IN DRW.); 0.2 ≤ L ≤ 6 (±0.05); 6 < L ≤ 30 (±0.1); 30 < L ≤ 120 (±0.15); 120 < L ≤ 400 (±0.2); 400 < L ≤ 1000 (±0.3); 1000 < L (±0.8)

LENGTH OF SHORTER SIDE OF ANGLE: L ≤ 10 (±1°); 10 < L ≤ 50 (±30' (±0.5°)); 50 < L ≤ 120 (±20' (±0.333°)); 120 < L ≤ 400 (±10' (±0.166°)); 400 < L (±5' (±0.083°))

CLASS: f, m

ANGLE TOLERANCE

CHAMFER TOLERANCE

LENGTH TOLERANCE