STRAIGHTNESS & FLATNESS TOLERANCE	CLASS	NOMINAL LENGTH					
		L ≤ 10	10 < L ≤ 30	30 < L ≤ 100	100 < L ≤ 300	300 < L ≤ 1000	1000 < L ≤ 3000
	H	±0.02	±0.05	±0.1	±0.2	±0.3	±0.4
	K	±0.05	±0.1	±0.2	±0.4	±0.6	±0.8

PERPENDICULARITY TOLERANCE	CLASS	NOMINAL LENGTH ON SHORTER SIDE			
		L ≤ 100	100 < L ≤ 300	300 < L ≤ 1000	1000 < L ≤ 3000
	H	±0.2	±0.3	±0.4	±0.5
	K	±0.4	±0.6	±0.8	±1.0

Absolute Max. Rating / 最大定格	DC 24V
Total Power / 消費電力合計	2.4W
Mass / 質量	-

M12 MALE CONNECTOR			
REF DRAWING	Pin No	Assign	WIRE COLOR INSIDE
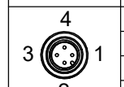	1	+V	RED/BROWN
	2		
	3	-V	BLACK/BLUE)
	4		

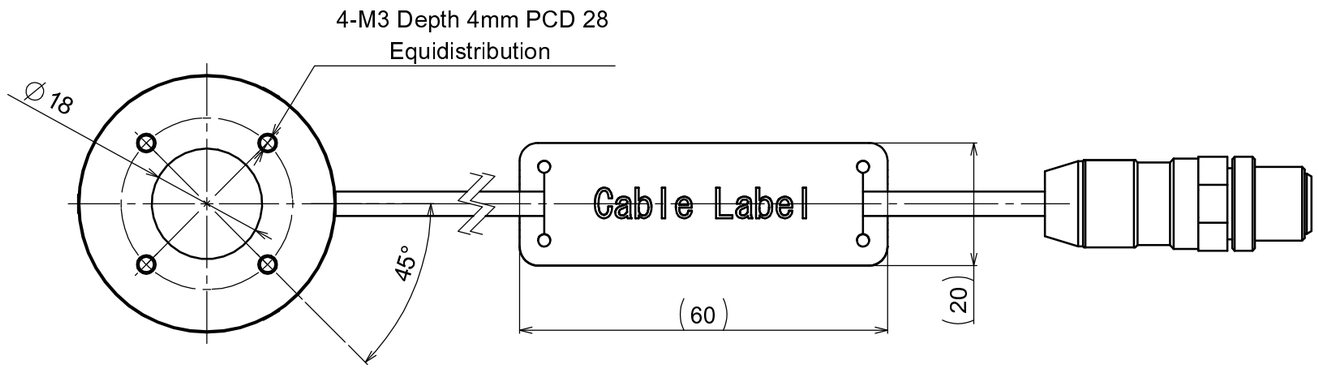

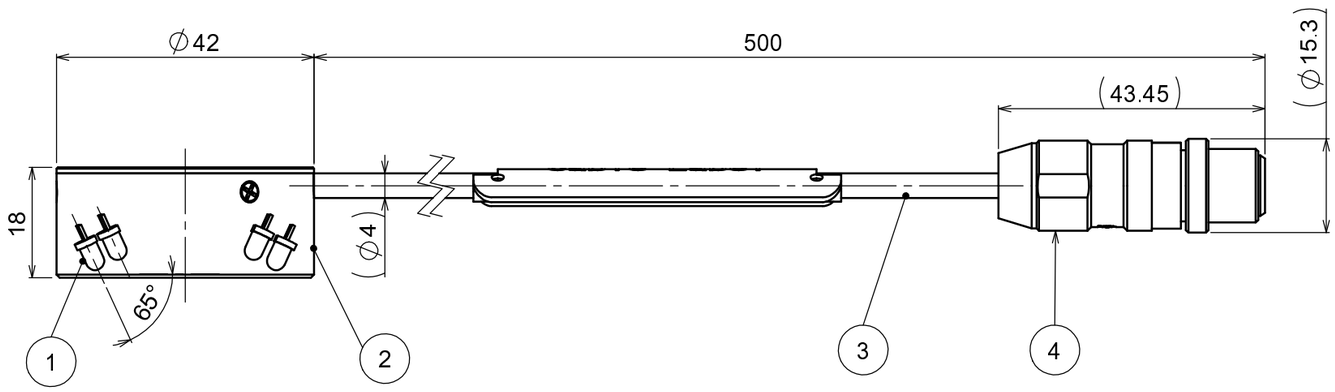

NO.	PART DESCRIPTION	MODEL NUMBER	QU.	NOTE
6				
5				
4	CONNECTOR/连接器	M12 MALE CONNECTOR	1	
3	CABLE/电缆		1	
2	HOUSING/外壳		1	
1	LED(BLUE)/灯珠（蓝色）		42	

MARK	COM-REV	DATE(YMD)	CHANGE	SIGNATURE
x				
x				
x				
x				
x	A-001	2022.Oct.24	New	-

DESIGNED	DRAWN	CHECKED	APPROVED
Yong Peng	Yong Peng	刘向辉	张亚萍

FINISH -
SURFACE -
MATERIAL -
CHAMFER -
TOLERANCE CLASS -
SCALE 1:1

UNIT:mm

MORITEX
Vision Creating Value

MODEL NAME: CV-R-42X18-65B-M12

PART NAME: OUTLINE DRAWING

DRAWING NO.: A21780A0100901A-001

SHEET: 1/1

OLD DRAWING NO. .

ORIGINAL SHEET FORMAT SIZE : A3

STANDARD DIMENSION RANGE — CLASS f: L < 0.2 ±0.05; 0.2 ≤ L ≤ 6 ±0.1; 6 < L ≤ 30 ±0.1; 30 < L ≤ 120 ±0.15; 120 < L ≤ 400 ±0.2; 400 < L ≤ 1000 ±0.3; 1000 < L ±0.8

STANDARD DIMENSION RANGE — CLASS m: L < 0.2 IN DRW.; 0.2 ≤ L ≤ 0.5 ±0.1; 0.5 < L ≤ 3 ±0.2; 3 < L ≤ 6 ±0.5; 6 < L ±1.0

LENGTH OF SHORTER SIDE OF ANGLE — CLASS f: L ≤ 10 ±1°; 10 < L ≤ 50 ±30' (±0.5°); 50 < L ≤ 120 ±20' (±0.333°); 120 < L ≤ 400 ±10' (±0.166°); 400 < L ±5' (±0.083°)

CHAMFER TOLERANCE

ANGLE TOLERANCE

LENGTH TOLERANCE