STRAIGHTNESS & FLATNESS TOLERANCE	CLASS	NOMINAL LENGTH					
		L ≤ 10	10 < L ≤ 30	30 < L ≤ 100	100 < L ≤ 300	300 < L ≤ 1000	1000 < L ≤ 3000
	H	±0.02	±0.05	±0.1	±0.2	±0.3	±0.4
	K	±0.05	±0.1	±0.2	±0.4	±0.6	±0.8

PERPENDICULARITY TOLERANCE	CLASS	NOMINAL LENGTH ON SHORTER SIDE			
		L ≤ 100	100 < L ≤ 300	300 < L ≤ 1000	1000 < L ≤ 3000
	H	±0.2	±0.3	±0.4	±0.5
	K	±0.4	±0.6	±0.8	±1.0

Absolute Max. Rating / 最大定格	24V
Total Power / 消費電力合計	15W

CN1	Assign / 信号
1	+V
2	NC
3	-V
4	NC

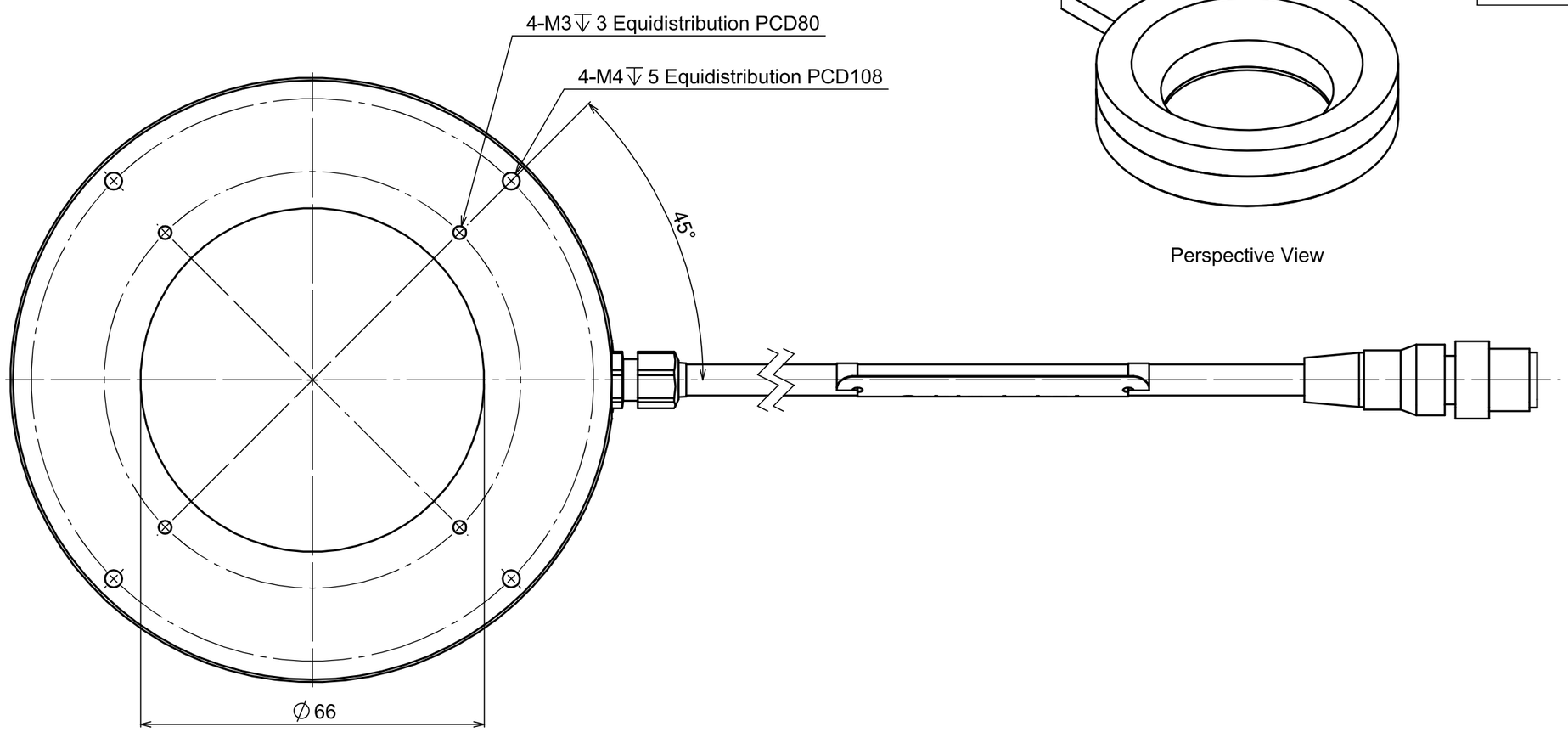

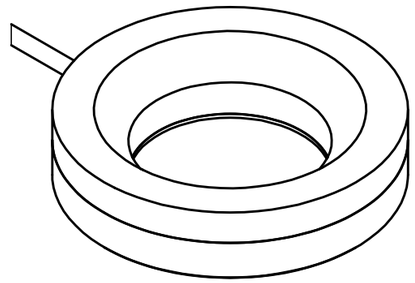

Perspective View

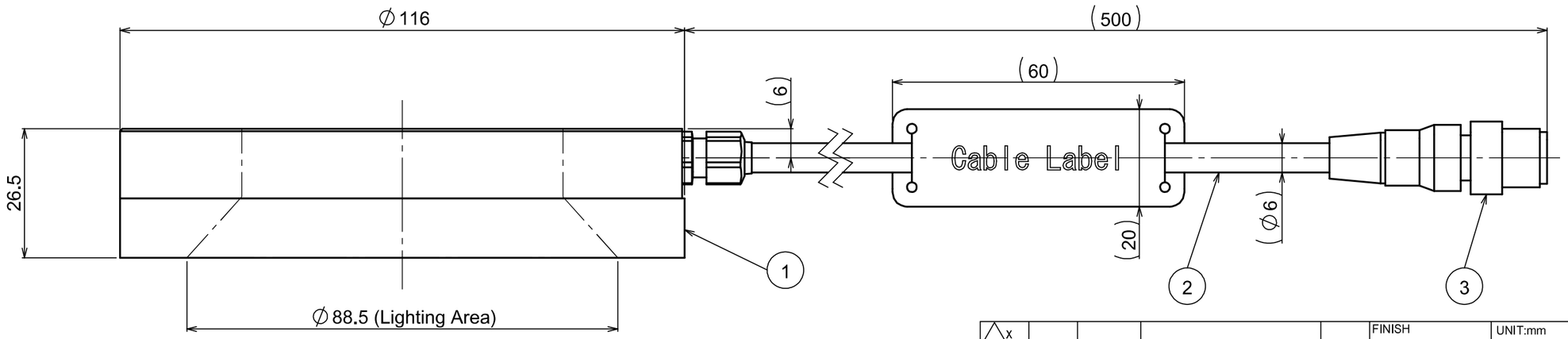

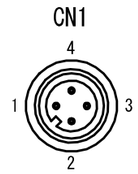

NO.	PART DESCRIPTION	MODEL NUMBER	QU.	NOTE
6				
5				
4	LED (BLUE)			
3	CONNECTOR		1	M12
2	CABLE		1	
1	DIFFUSER		1	PC

MARK	COM-REV	DATE(YMD)	CHANGE	SIGNATURE
x				
x				
x				
x0	A-002	2024.Sep.18	Delete screws	Nakazaki
	A-001	2017.Apr.27	NEW	-

DESIGNED	DRAWN	CHECKED	APPROVED
Ito	Umatani	モリテックス '24.09.19 土門	モリテックス '24.09.19 達

FINISH -
SURFACE -
MATERIAL -
CHAMFER -
TOLERANCE CLASS -
SCALE 1:1

UNIT:mm

MORITEX
A Cognex Company

MODEL NAME: CV-HR-116X66B-M12

PART NAME: OUTLINE DRAWING

DRAWING NO.: A22370A0100301A-002

SHEET: 1/1

ORIGINAL SHEET FORMAT SIZE : A3

OLD DRAWING NO.