STRAIGHTNESS & FLATNESS TOLERANCE	CLASS	NOMINAL LENGTH					
		L ≤ 10	10 < L ≤ 30	30 < L ≤ 100	100 < L ≤ 300	300 < L ≤ 1000	1000 < L ≤ 3000
	H	±0.02	±0.05	±0.1	±0.2	±0.3	±0.4
	K	±0.05	±0.1	±0.2	±0.4	±0.6	±0.8

PERPENDICULARITY TOLERANCE	CLASS	NOMINAL LENGTH ON SHORTER SIDE			
		L ≤ 100	100 < L ≤ 300	300 < L ≤ 1000	1000 < L ≤ 3000
	H	±0.2	±0.3	±0.4	±0.5
	K	±0.4	±0.6	±0.8	±1.0

Absolute Max. Rating / 最大定格	DC24V
Total Power / 消費電力合計	3.3W
Mass / 質量	

M12 MALE CONNECTOR

REF DRAWING	Pin No	Assign	WIRE COLOR INSIDE
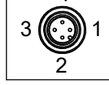	1	+V	RED/BROWN
	2		
	3	-V	BLACK/BLUE)
	4		

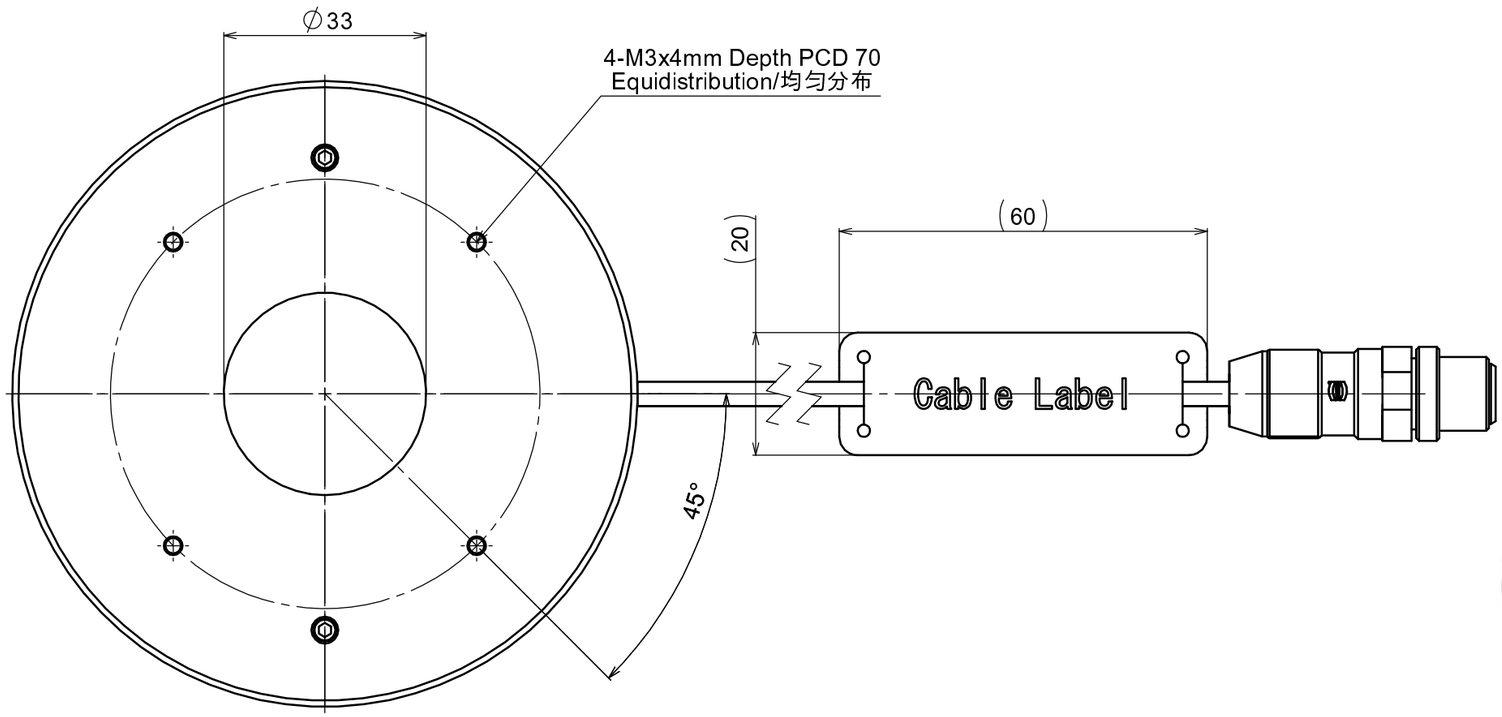

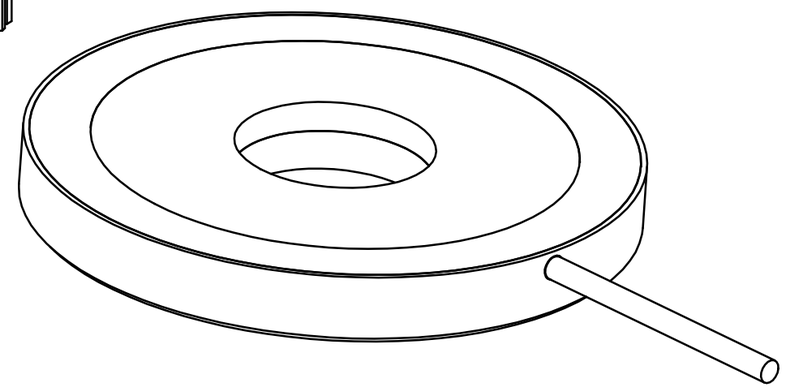

Perspective View

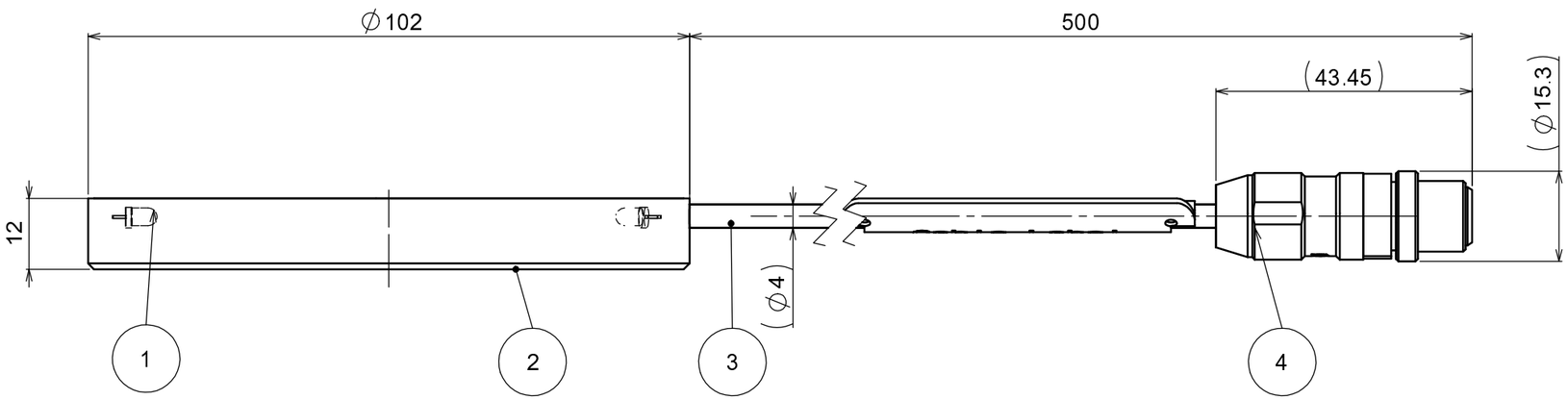

NO.	PART DESCRIPTION	MODEL NUMBER	QU.	NOTE
6				
5				
4	CONNECTOR	M12 MALE	1	
3	CABLE		1	
2	HOUSING		1	Alminium Alloy / Mat Black Anodizing
1	LED(Blue)		-	

MARK	COM-REV	DATE(YMD)	CHANGE	SIGNATURE
x				
x				
x				
x				
x	A-001	2022.Oct.18	NEW	-

DESIGNED	DRAWN	CHECKED	APPROVED
Yong Peng	Yong Peng	刘向辉	张丽萍

FINISH -
SURFACE
MATERIAL -
CHAMFER -
TOLERANCE CLASS -
SCALE 1:1

UNIT:mm

MORITEX
Vision Creating Value

MODEL NAME: CV-FR-102X33B-M12

PART NAME: OUTLINE DRAWING

DRAWING NO.: A21800A0100901A-001

SHEET: 1/1

OLD DRAWING NO. .

STANDARD DIMENSION RANGE (CLASS f / m): L < 0.2 — IN DRW. / ±0.1; 0.2 ≤ L ≤ 0.5 — ±0.1 / ±0.2; 0.5 < L ≤ 3 — ±0.2 / ±0.3; 3 < L ≤ 6 — ±0.5 / ±0.5; 6 < L — ±1.0 / ±1.0

STANDARD DIMENSION RANGE (CLASS f / m): 6 < L ≤ 30 — ±0.1 / ±0.2; 30 < L ≤ 120 — ±0.15 / ±0.3; 120 < L ≤ 400 — ±0.2 / ±0.5; 400 < L ≤ 1000 — ±0.3 / ±0.8

LENGTH OF SHORTER SIDE OF ANGLE (CLASS f / m): L ≤ 10 — ±1° / ±1°; 10 < L ≤ 50 — ±30' (±0.5°) / ±30' (±0.5°); 50 < L ≤ 120 — ±20' (±0.333°) / ±20' (±0.333°); 120 < L ≤ 400 — ±10' (±0.166°) / ±10' (±0.166°); 400 < L — ±5' (±0.083°) / ±5' (±0.083°)

ORIGINAL SHEET FORMAT SIZE : A3