STRAIGHTNESS & FLATNESS TOLERANCE	CLASS	NOMINAL LENGTH L ≤ 10	10 < L ≤ 30	30 < L ≤ 100	100 < L ≤ 300	300 < L ≤ 1000	1000 < L ≤ 3000
	H	±0.02	±0.05	±0.1	±0.2	±0.3	±0.4
	K	±0.05	±0.1	±0.2	±0.4	±0.6	±0.8

PERPENDICULARITY TOLERANCE	CLASS	NOMINAL LENGTH ON SHORTER SIDE L ≤ 100	100 < L ≤ 300	300 < L ≤ 1000	1000 < L ≤ 3000
	H	±0.2	±0.3	±0.4	±0.5
	K	±0.4	±0.6	±0.8	±1.0

Absolute Max. Rating / 最大定格	DC24V
Total Power / 消費電力合計	4.5W
Mass / 質量	-

M12 Male Connector

Ref. Drawing	No	Assign	Wire Color
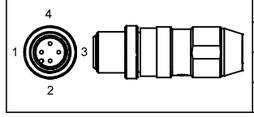	1	+V	Red/Brown
	2	NC	
	3	-V	Black/Blue
	4	NC	

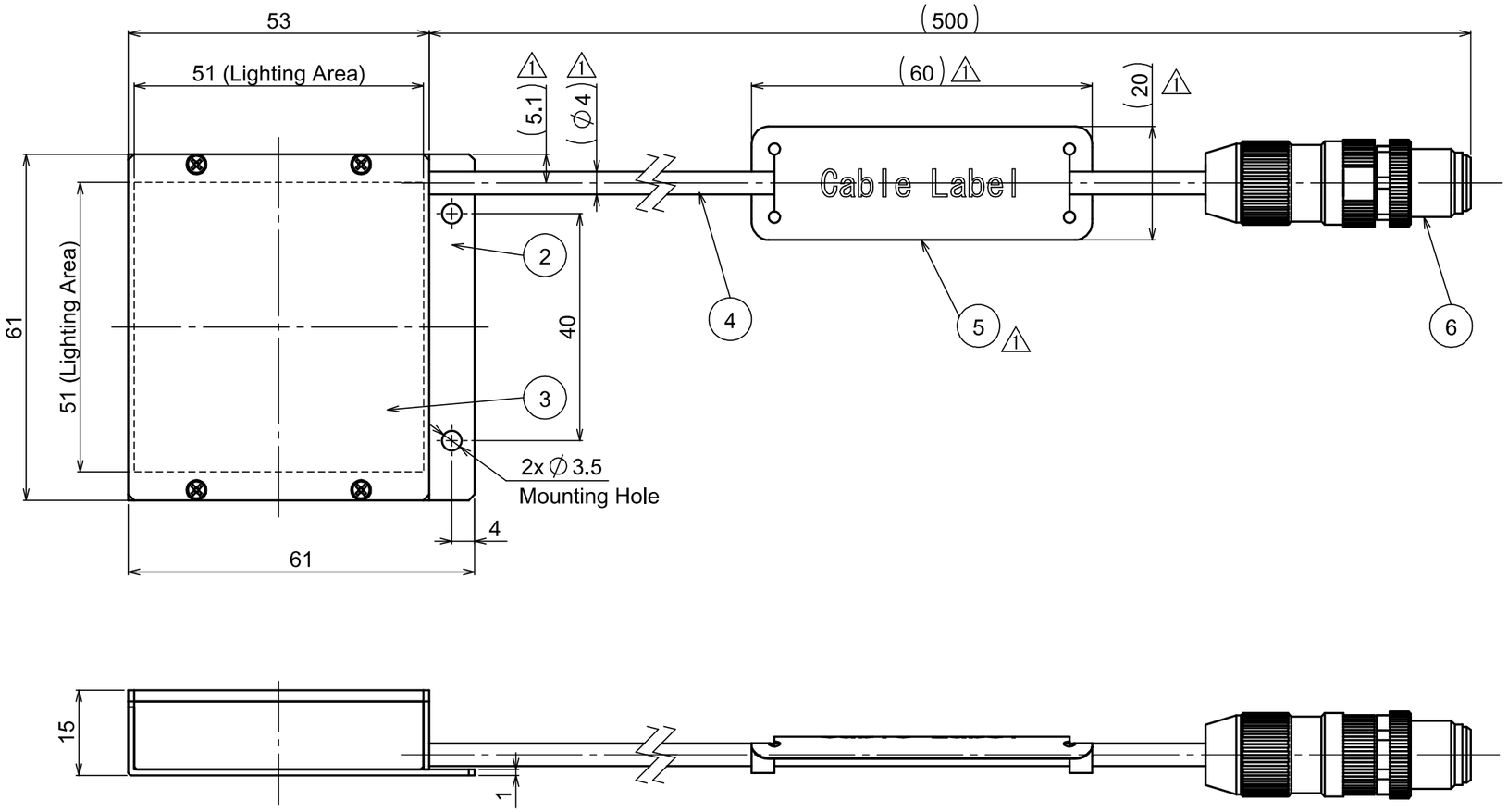

7					
6	CONNECTOR	M12Male	1		
5	CABLE LABEL		1		
4	CABLE		1		
3	DIFFUSER PLATE		1		
2	HOUSING		1	Aluminium Alloy / Glass Bead Blasted Black Anodizing	
1	LED(RED)		-		
NO.	PART DESCRIPTION	MODEL NUMBER	QU.	NOTE	

MARK	COM-REV	DATE(YMD)	CHANGE	SIGNATURE
x7	A-002	2025.Apr.24	Add Cable Label , etc	Okazaki
	A-001	2023.Oct.17	NEW	-

DESIGNED	DRAWN	CHECKED	APPROVED
xinghuiliu	xinghuiliu	'25.04.25	'25.05.07

FINISH -
SURFACE -
MATERIAL -
CHAMFER -
TOLERANCE CLASS -
SCALE 1:1

UNIT:mm

MORITEX
A Cognex Company

MODEL NAME: CV-FL-51X51R-M12

PART NAME: OUTLINE DRAWING

DRAWING NO. A21818A0101001A-002

SHEET 1/1

OLD DRAWING NO.

STANDARD DIMENSION RANGE (CLASS f / m): L < 0.2 IN DRW.; 0.2 ≤ L ≤ 0.5 ±0.1; 0.5 < L ≤ 3 ±0.2; 3 < L ≤ 6 ±0.5; 6 < L ±1.0

ORIGINAL SHEET FORMAT SIZE : A3

STANDARD DIMENSION RANGE (CLASS f / m): L ≤ 10 ±0.05 ±0.1; 10 < L ≤ 30 ±0.1 ±0.2; 30 < L ≤ 120 ±0.15 ±0.3; 120 < L ≤ 400 ±0.2 ±0.5; 400 < L ≤ 1000 ±0.3 ±0.8

LENGTH OF SHORTER SIDE OF ANGLE (CLASS f / m): L ≤ 10 ±1° ±1°; 10 < L ≤ 50 ±30' (±0.5°); 50 < L ≤ 120 ±20' (±0.333°); 120 < L ≤ 400 ±10' (±0.166°); 400 < L ±5' (±0.083°)

ANGLE TOLERANCE

CHAMFER TOLERANCE

LENGTH TOLERANCE