STRAIGHTNESS & FLATNESS TOLERANCE CLASS	NOMINAL LENGTH L ≤ 10	10 < L ≤ 30	30 < L ≤ 100	100 < L ≤ 300	300 < L ≤ 1000	1000 < L ≤ 3000
H	±0.02	±0.05	±0.1	±0.2	±0.3	±0.4
K	±0.05	±0.1	±0.2	±0.4	±0.6	±0.8

PERPENDICULARITY TOLERANCE CLASS	NOMINAL LENGTH ON SHORTER SIDE L ≤ 100	100 < L ≤ 300	300 < L ≤ 1000	1000 < L ≤ 3000
H	±0.2	±0.3	±0.4	±0.5
K	±0.4	±0.6	±0.8	±1.0

ANGLE TOLERANCE CLASS	LENGTH OF SHORTER SIDE OF ANGLE L ≤ 10	10 < L ≤ 50	50 < L ≤ 120	120 < L ≤ 400	400 < L
f	±1°	±30' (±0.5°)	±20' (±0.333°)	±10' (±0.166°)	±5' (±0.083°)
m					

CHAMFER TOLERANCE CLASS	STANDARD DIMENSION RANGE L < 0.2	0.2 ≤ L ≤ 0.5	0.5 < L ≤ 3	3 < L ≤ 6	6 < L
f	IN DRW.	±0.1	±0.2	±0.5	±1.0
m					

LENGTH TOLERANCE CLASS	STANDARD DIMENSION RANGE L < 0.2	0.2 ≤ L ≤ 6	6 < L ≤ 30	30 < L ≤ 120	120 < L ≤ 400	400 < L ≤ 1000
f	IN DRW.	±0.05	±0.1	±0.15	±0.2	±0.3
m		±0.1	±0.2	±0.3	±0.5	±0.8

ORIGINAL SHEET FORMAT SIZE : A3

Absolute Max. Rating / 最大定格	DC24V
Total Power / 消費電力合計	1.5W
Mass / 質量	-

M12 Male Connector

Ref. Drawing	No	Assign	Wire Color
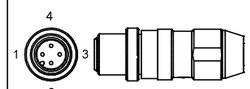	1	+V	Red/Brown
	2	NC	
	3	-V	Black/Blue
	4	NC	

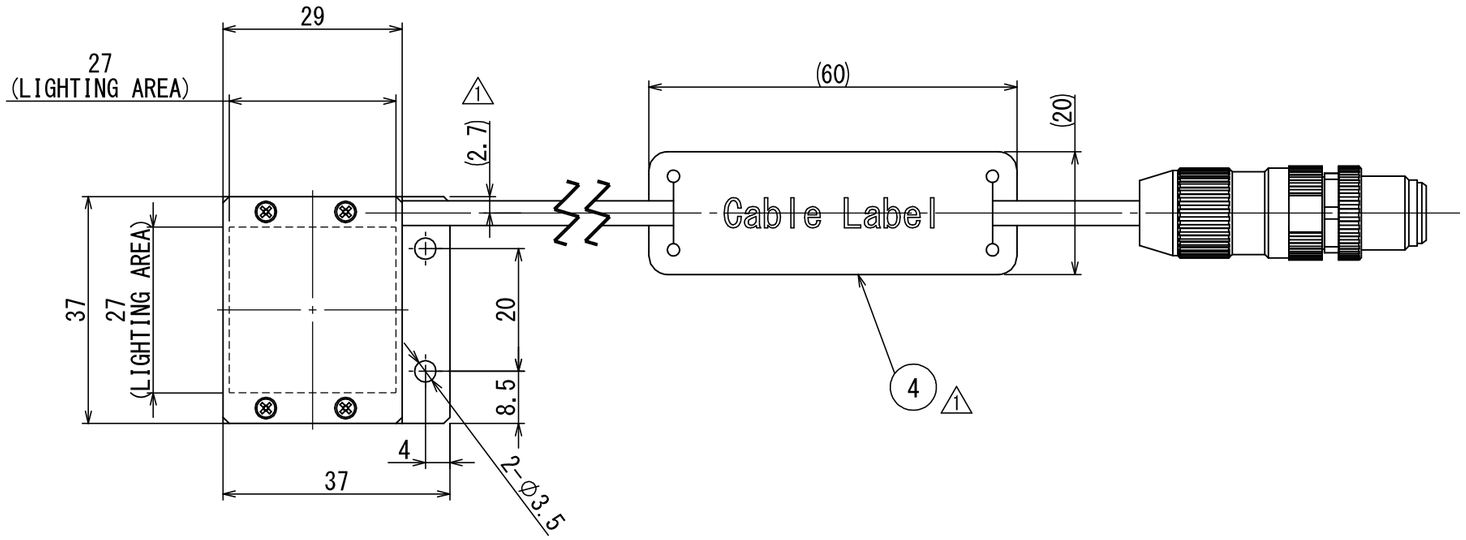

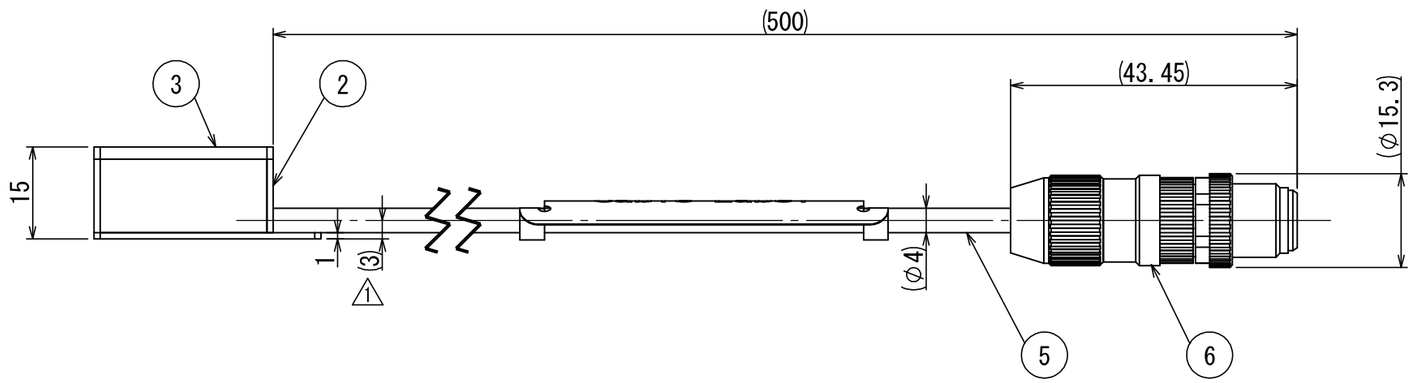

NO.	PART DESCRIPTION	MODEL NUMBER	QU.	NOTE
6	CONNECTOR	M12Male	1	
5	CABLE		1	
4	CABLE LABEL 1		1	
3	DIFFUSER PLATE		1	
2	HOUSING		1	Aluminium Alloy / Glass Bead Blasted Black Anodizing 1
1	LED(WHITE)		-	

OLD DRAWING NO.

MARK	COM-REV	DATE(YMD)	CHANGE	SIGNATURE
x				
x				
x				
1 x5	A-002	2025.Apr.11	Add Cable Label, etc.	Okazaki
x	A-001	2023.Jun.29	NEW	-

DESIGNED	DRAWN	CHECKED	APPROVED
Yong Peng	Yong Peng	'25.04.15 土門	'25.04.15 達

FINISH -
SURFACE -
MATERIAL -
CHAMFER -
TOLERANCE CLASS -
SCALE 1:1

UNIT:mm

MORITEX A Cognex Company

MODEL NAME: CV-FL-27X27W-M12

PART NAME: OUTLINE DRAWING

DRAWING NO.: A21817A0100901A-002

SHEET: 1/1