STRAIGHTNESS & FLATNESS TOLERANCE	CLASS	NOMINAL LENGTH					
		L ≤ 10	10 < L ≤ 30	30 < L ≤ 100	100 < L ≤ 300	300 < L ≤ 1000	1000 < L ≤ 3000
	H	±0.02	±0.05	±0.1	±0.2	±0.3	±0.4
	K	±0.05	±0.1	±0.2	±0.4	±0.6	±0.8

PERPENDICULARITY TOLERANCE	CLASS	NOMINAL LENGTH ON SHORTER SIDE			
		L ≤ 100	100 < L ≤ 300	300 < L ≤ 1000	1000 < L ≤ 3000
	H	±0.2	±0.3	±0.4	±0.5
	K	±0.4	±0.6	±0.8	±1.0

ANGLE TOLERANCE	CLASS	LENGTH OF SHORTER SIDE OF ANGLE					
		L ≤ 10	10 < L ≤ 50	50 < L ≤ 120	120 < L ≤ 400	400 < L	
	f	±1°	±30' (±0.5°)	±20' (±0.333°)	±10' (±0.166°)	±5' (±0.083°)	
	m						

Absolute Max. Rating / 最大定格	DC24V
Total Power / 消費電力合計	0.9W
Mass / 質量	-

M12 Male Connector

Ref. Drawing	No	Assign	Wire Color
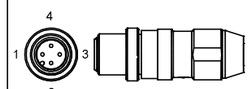	1	+V	Red/Brown
	2	NC	
	3	-V	Black/Blue
	4	NC	

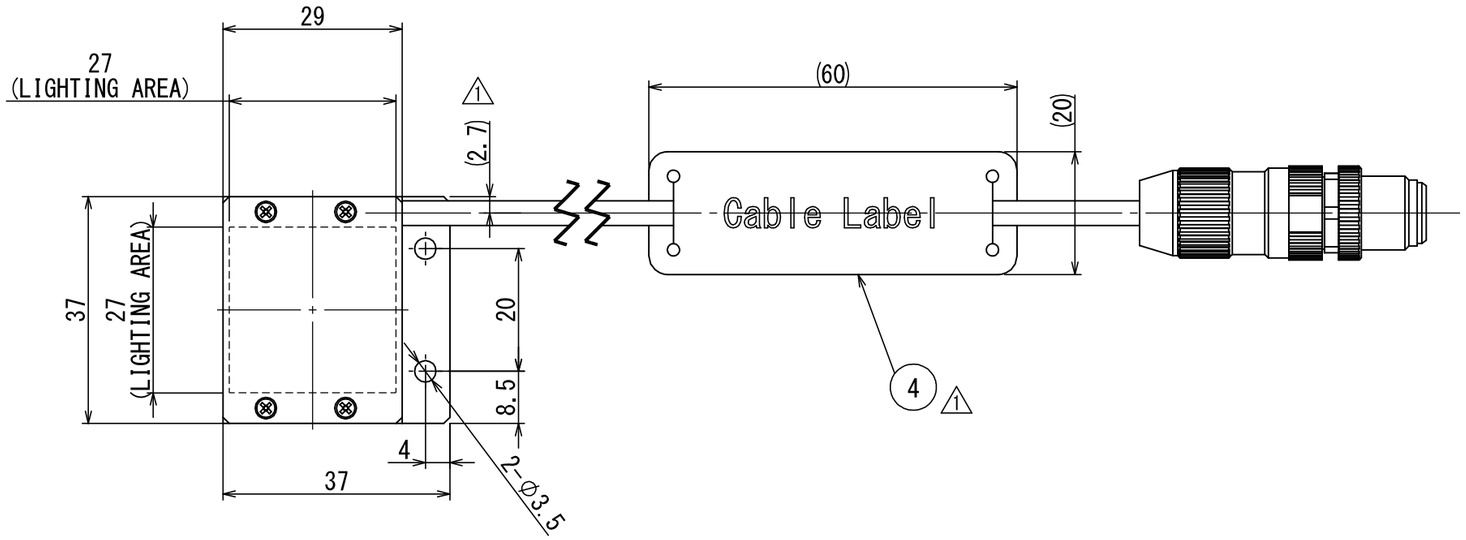

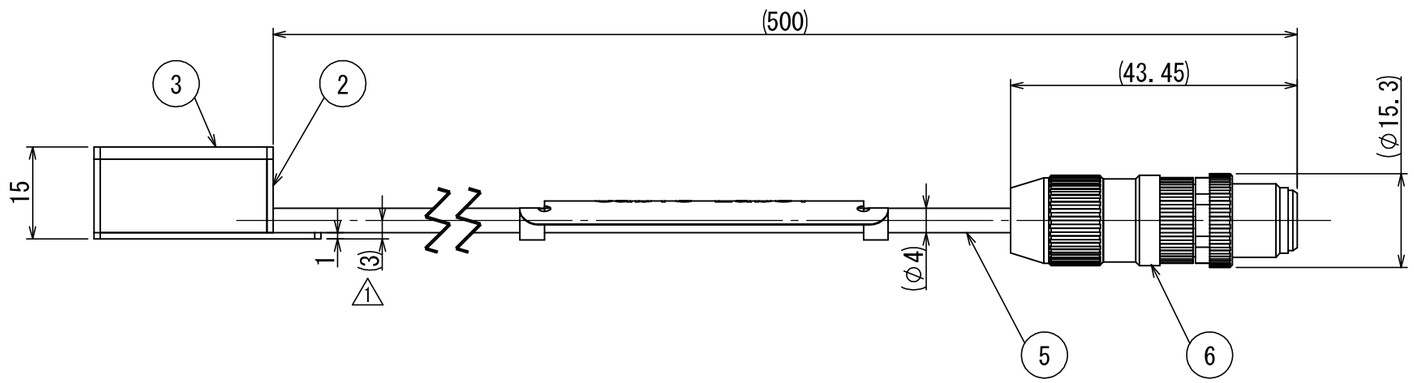

ORIGINAL SHEET FORMAT SIZE : A3	CLASS	STANDARD DIMENSION RANGE															
		L < 0.2		0.2 ≤ L ≤ 6		6 < L ≤ 30		30 < L ≤ 120		120 < L ≤ 400		400 < L ≤ 1000					
	f	IN DRW.		±0.1		±0.1		±0.1		±0.2		±0.3					
	m	IN DRW.		±0.1		±0.2		±0.2		±0.5		±0.8					

CHAMFER TOLERANCE	CLASS	STANDARD DIMENSION RANGE					
		L < 0.2	0.2 ≤ L ≤ 0.5	0.5 < L ≤ 3	3 < L ≤ 6	6 < L	
	f	IN DRW.	±0.1	±0.2	±0.5	±1.0	
	m	IN DRW.	±0.1	±0.2	±0.5	±1.0	

LENGTH TOLERANCE	CLASS	STANDARD DIMENSION RANGE					
		L < 0.2	0.2 ≤ L ≤ 6	6 < L ≤ 30	30 < L ≤ 120	120 < L ≤ 400	400 < L ≤ 1000
	f	IN DRW.	±0.1	±0.1	±0.1	±0.2	±0.3
	m	IN DRW.	±0.1	±0.2	±0.2	±0.5	±0.8

NO.	PART DESCRIPTION	MODEL NUMBER	QU.	NOTE
6	CONNECTOR	M12Male	1	
5	CABLE		1	
4	CABLE LABEL 1		1	
3	DIFFUSER PLATE		1	
2	HOUSING		1	Aluminium Alloy / Glass Bead Blasted Black Anodizing 1
1	LED(RED)		-	

OLD DRAWING NO.

MARK	COM-REV	DATE(YMD)	CHANGE	SIGNATURE
x				
x				
x				
1 x6	A-002	2025.Apr.11	Add Cable Label, etc.	Okazaki
x	A-001	2022.Oct.12	NEW	-

DESIGNED	DRAWN	CHECKED	APPROVED
Yong Peng	Yong Peng	モリテックス '25.04.15 土門	モリテックス '25.04.15 達

FINISH	-
SURFACE	-
MATERIAL	-
CHAMFER	-
TOLERANCE CLASS	-
SCALE	1:1

UNIT:mm

MORITEX
A Cognex Company

MODEL NAME: CV-FL-27X27R-M12

PART NAME: OUTLINE DRAWING

DRAWING NO.: A21817A0100801A-002

SHEET: 1/1