STRAIGHTNESS & FLATNESS TOLERANCE	NOMINAL LENGTH					
CLASS	L ≤ 10	10 < L ≤ 30	30 < L ≤ 100	100 < L ≤ 300	300 < L ≤ 1000	1000 < L ≤ 3000
H	±0.02	±0.05	±0.1	±0.2	±0.3	±0.4
K	±0.05	±0.1	±0.2	±0.4	±0.6	±0.8

PERPENDICULARITY TOLERANCE	NOMINAL LENGTH ON SHORTER SIDE			
CLASS	L ≤ 100	100 < L ≤ 300	300 < L ≤ 1000	1000 < L ≤ 3000
H	±0.2	±0.3	±0.4	±0.5
K	±0.4	±0.6	±0.8	±1.0

ANGLE TOLERANCE						
LENGTH OF SHORTER SIDE OF ANGLE	L ≤ 10	10 < L ≤ 50	50 < L ≤ 120	120 < L ≤ 400	400 < L	
CLASS f m	±1°	±30' (±0.5°)	±20' (±0.333°)	±10' (±0.166°)	±5' (±0.083°)	

CHAMFER TOLERANCE						
STANDARD DIMENSION RANGE	L < 0.2	0.2 ≤ L ≤ 0.5	0.5 < L ≤ 3	3 < L ≤ 6	6 < L	
CLASS f m	IN DRW.	±0.1	±0.2	±0.5	±1.0	

ORIGINAL SHEET FORMAT SIZE : A3

LENGTH TOLERANCE						
STANDARD DIMENSION RANGE	L < 0.2	0.2 ≤ L ≤ 6	6 < L ≤ 30	30 < L ≤ 120	120 < L ≤ 400	400 < L ≤ 1000
CLASS f m	IN DRW.	±0.05 ±0.1	±0.1 ±0.2	±0.15 ±0.3	±0.2 ±0.5	±0.3 ±0.8

Absolute Max. Rating / 最大定格	DC24V
Total Power / 消費電力合計	4.9W
Mass / 質量	-

M12 Male Connector

Ref. Drawing	No	Assign	Wire Color
	1	+V	Red/Brown
	2	NC	
	3	-V	Black/Blue
	4	NC	

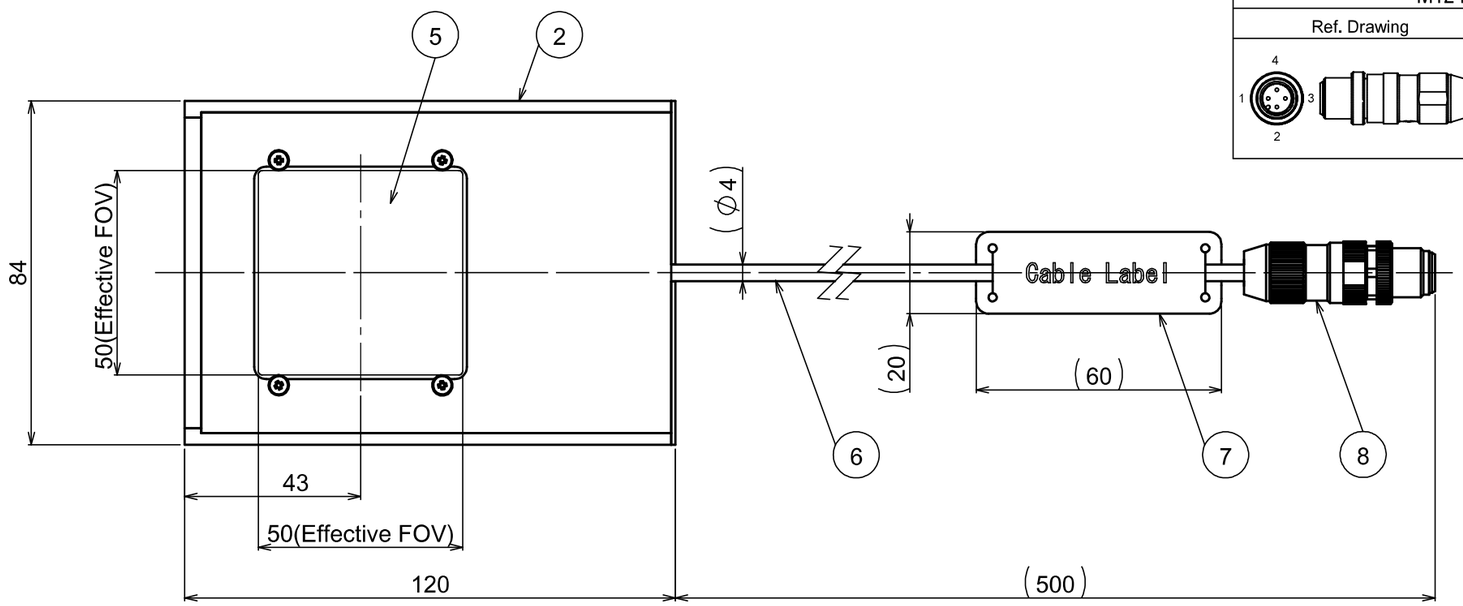

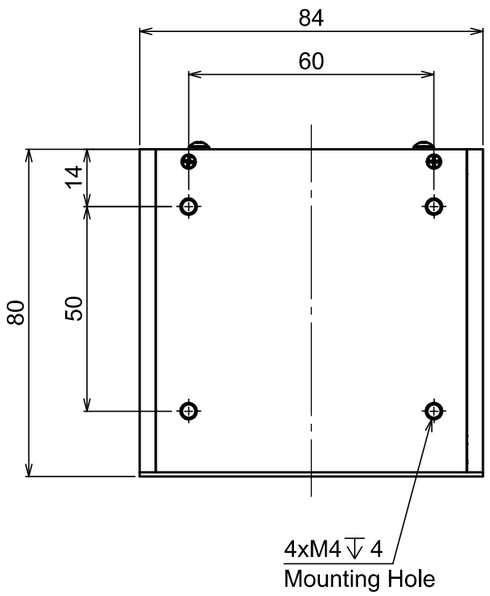

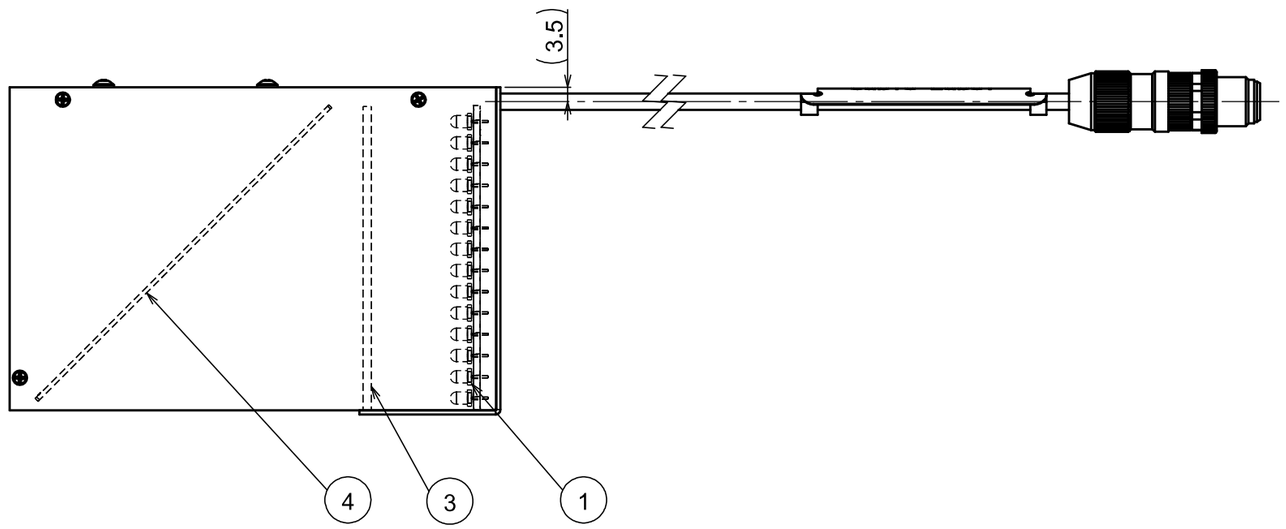

NO.	PART DESCRIPTION	MODEL NUMBER	QU.	NOTE
8	CONNECTOR	M12 Male	1	
7	CABLE LABEL		1	
6	CABLE		1	
5	COVER GLASS		1	
4	HALF MIRROR		1	
3	DIFFUSER PLATE		1	
2	HOUSING		1	Alminium Alloy / Glass Bead Blasted Black Anodizing
1	LED(RED)		-	

MARK	COM-REV	DATE(YMD)	CHANGE	SIGNATURE
x				
x				
x				
x	A-002	2025.Jun.27	Completely revised	Suzuki
	A-001	2022.May.13	NEW	-

DESIGNED	DRAWN	CHECKED	APPROVED
Yong Peng	Yong Peng	モリテックス '25.06.30 十門	モリテックス '25.06.30 達

FINISH -
SURFACE -
MATERIAL -
CHAMFER -
TOLERANCE CLASS -
SCALE 1:1.5

UNIT:mm

MORITEX
A Cognex Company

MODEL NAME
CV-CX-120X84X79R-M12

PART NAME
OUTLINE DRAWING

DRAWING NO. A21825A0101001A-002

SHEET 1/1

OLD DRAWING NO.