| STRAIGHTNESS & FLATNESS TOLERANCE | NOMINAL LENGTH | | | | | |
|---|---|---|---|---|---|---|
| CLASS | L ≤ 10 | 10 < L ≤ 30 | 30 < L ≤ 100 | 100 < L ≤ 300 | 300 < L ≤ 1000 | 1000 < L ≤ 3000 |
| H | ±0.02 | ±0.05 | ±0.1 | ±0.2 | ±0.3 | ±0.4 |
| K | ±0.05 | ±0.1 | ±0.2 | ±0.4 | ±0.6 | ±0.8 |

| PERPENDICULARITY TOLERANCE | NOMINAL LENGTH ON SHORTER SIDE | | | |
|---|---|---|---|---|
| CLASS | L ≤ 100 | 100 < L ≤ 300 | 300 < L ≤ 1000 | 1000 < L ≤ 3000 |
| H | ±0.2 | ±0.3 | ±0.4 | ±0.5 |
| K | ±0.4 | ±0.6 | ±0.8 | ±1.0 |

| ANGLE TOLERANCE | | | | | | |
|---|---|---|---|---|---|---|
| LENGTH OF SHORTER SIDE OF ANGLE | L ≤ 10 | 10 < L ≤ 50 | 50 < L ≤ 120 | 120 < L ≤ 400 | 400 < L | |
| CLASS f m | ±1° | ±30' (±0.5°) | ±20' (±0.333°) | ±10' (±0.166°) | ±5' (±0.083°) | |

| CHAMFER TOLERANCE | | | | | | |
|---|---|---|---|---|---|---|
| STANDARD DIMENSION RANGE | L < 0.2 | 0.2 ≤ L ≤ 0.5 | 0.5 < L ≤ 3 | 3 < L ≤ 6 | 6 < L | |
| CLASS f m | IN DRW. | ±0.1 | ±0.2 | ±0.5 | ±1.0 | |

| LENGTH TOLERANCE | | | | | | |
|---|---|---|---|---|---|---|
| STANDARD DIMENSION RANGE | L < 0.2 | 0.2 ≤ L ≤ 6 | 6 < L ≤ 30 | 30 < L ≤ 120 | 120 < L ≤ 400 | 400 < L ≤ 1000 |
| CLASS f m | IN DRW. | ±0.05 | ±0.1 | ±0.15 | ±0.2 | ±0.3 |
| | | ±0.1 | ±0.2 | ±0.3 | ±0.5 | ±0.8 |

ORIGINAL SHEET FORMAT SIZE : A3

| | |
|---|---|
| Absolute Max. Rating / 最大定格 | DC24V |
| Total Power / 消費電力合計 | 5.8W |
| Mass / 質量 | - |

M12 Male Connector

| Ref. Drawing | No | Assign | Wire Color |
|---|---|---|---|
|  | 1 | +V | Red/Brown |
| | 2 | NC | |
| | 3 | -V | Black/Blue |
| | 4 | NC | |

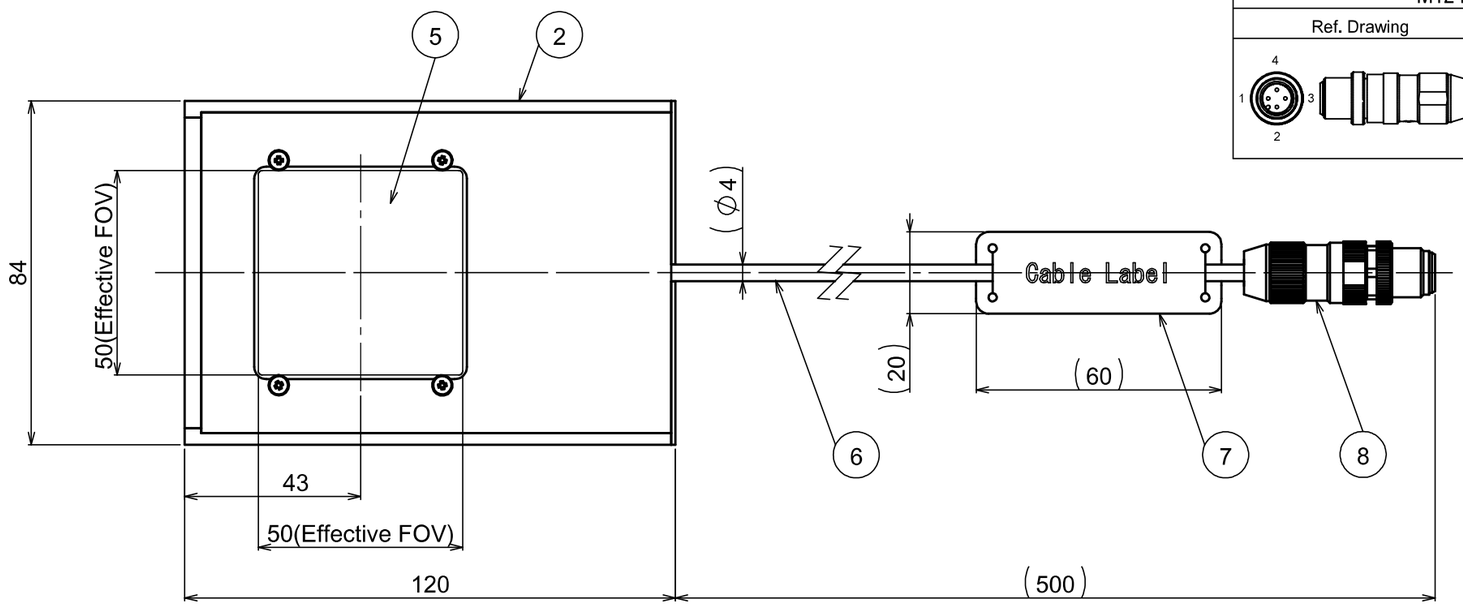


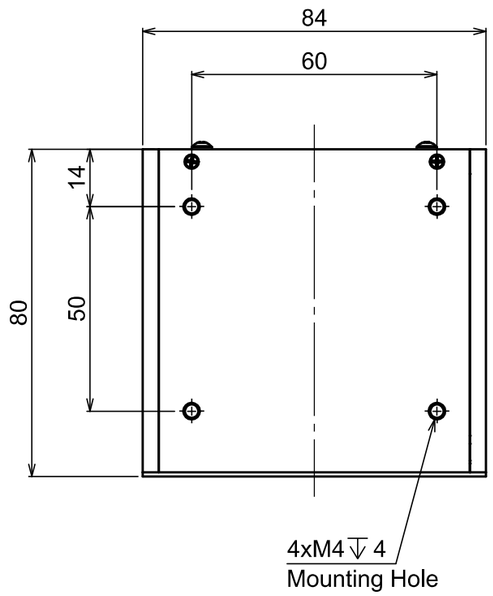


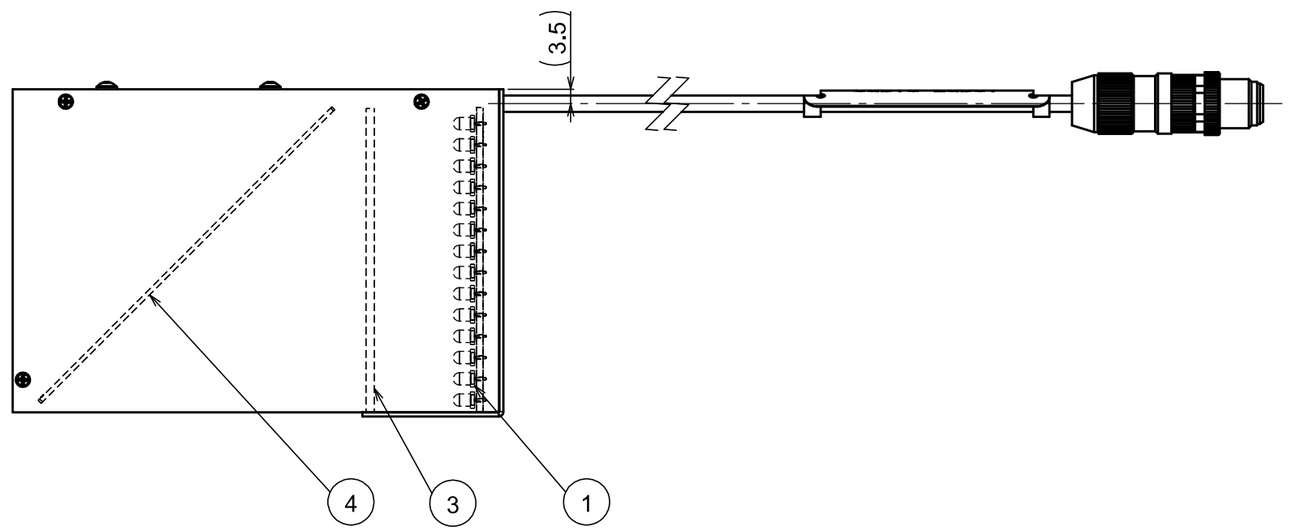


| NO. | PART DESCRIPTION | MODEL NUMBER | QU. | NOTE |
|---|---|---|---|---|
| 8 | CONNECTOR | M12 Male | 1 | |
| 7 | CABLE LABEL | | 1 | |
| 6 | CABLE | | 1 | |
| 5 | COVER GLASS | | 1 | |
| 4 | HALF MIRROR | | 1 | |
| 3 | DIFFUSER PLATE | | 1 | |
| 2 | HOUSING | | 1 | Alminium Alloy / Glass Bead Blasted Black Anodizing |
| 1 | LED(BLUE) | | - | |

| MARK | COM-REV | DATE(YMD) | CHANGE | SIGNATURE |
|---|---|---|---|---|
| x | | | | |
| x | | | | |
| x | | | | |
| x | A-002 | 2025.Jun.27 | Completely revised | Suzuki |
| | A-001 | 2022.May.12 | NEW | - |

| DESIGNED | DRAWN | CHECKED | APPROVED |
|---|---|---|---|
| Yong Peng | Yong Peng | '25.06.30 土門 | '25.06.30 達 |

FINISH -
SURFACE -
MATERIAL -
CHAMFER -
TOLERANCE CLASS -
SCALE 1:1.5

UNIT:mm

MORITEX
A Cognex Company

MODEL NAME
CV-CX-120X84X79B-M12

PART NAME
OUTLINE DRAWING

DRAWING NO. A21825A0101101A-002

SHEET 1/1

OLD DRAWING NO.