RoHS Compliance

Absolute Max. Rating / 最大定格	0.62 A
Total Power / 消費電力合計	7.4 W
Mass / 質量	520 g

CN1	Assign / 信号
1	+V
2	+S
3	-S
4	-V

Notes:
CSK = Countersink / 皿ザグリ
OD = Outside Diameter / 外径
CBORE = Counterbore / 深ザグリ
PCD = Pitch Circle Diameter / ピッチ円直径
FOV = Field Of View / 視野

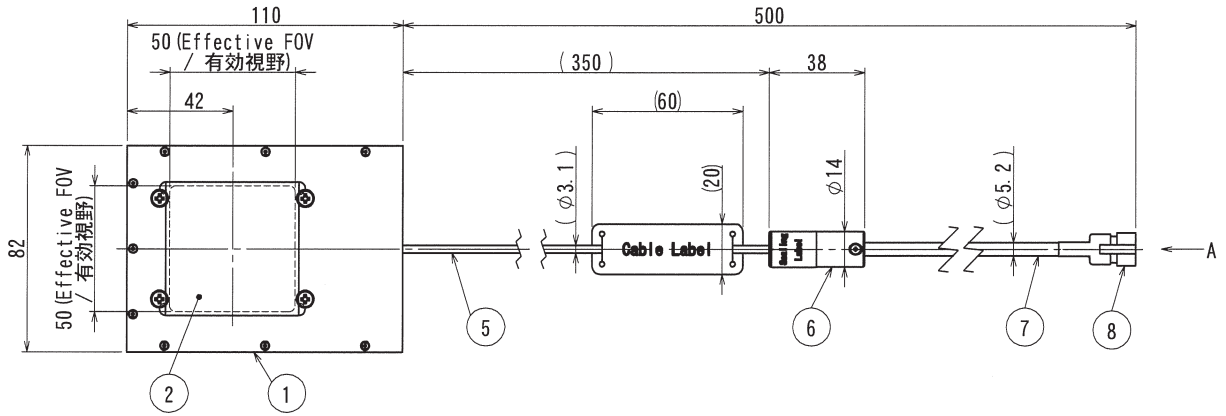

View A / 矢視A
(1:1)

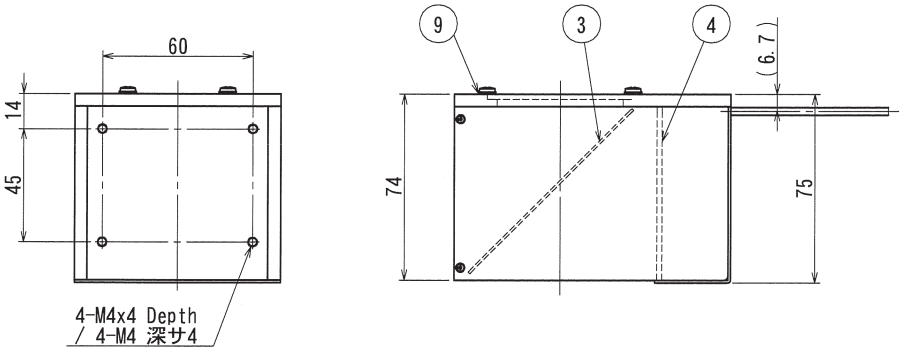

NO.	PART DESCRIPTION	MODEL NUMBER	QU.	NOTE
10	LED (Red)			
9	Washer		4	Nylon
8	Connector	SMR-04V-B	1	JST / Paired Connector: SMP-04V-BC Contact: SHF-001T-0.8BS
7	Cable		1	
6	SENS BOX		1	Alminium Alloy / Mat Black Anodizing
5	Cable		1	
4	Diffuser Plate		1	Acrylic
3	Half Mirror		1	Glass
2	Cover Glass		1	Glass
1	Housing		1	Alminium Alloy / Mat Black Anodizing

MARK	COM-REV	DATE	CHANGE	SIGNATURE
1	A-003	19/Oct/12	Add Label, Change Form	Takekura
	A-002	26/Aug/10	Change Dimension, etc.	Tazaki

DESIGNED	DRAWN	CHECKED	APPROVED
Akimoto	Akimoto	'12.11.29 畑山(和)	'12.11.29 清水(隆)

FINISH -
SURFACE -
MATERIAL -
CHAMFER -
TOLERANCE -
SCALE 1:2

UNIT : mm

MORITEX SCHOTT

MODEL NAME: MSCL-CR74-B

PART NAME: OUTLINE DRAWING / 外観図

DRAWING NO.: A09335A0100101A-003

SHT: 1/1

LENGTH OF SHORT ONE ON THE BANK

	L ≦ 10	10 < L ≦ 50	50 < L ≦ 120	120 < L < 400	400 < L
TOL A	±1°	±30'	±20'	±10'	±5'
TOL B					

ANGLE TOL

ORIGINAL SIZE:A-3

CLASS OF MEASURE

	L < 0.5	0.5 ≦ L ≦ 3	3 < L ≦ 6	6 < L
TOL A	IN DRW.	±0.2	±0.5	±1.0
TOL B				

CHAMFER TOL

CLASS OF MEASURE

	0.5 < L ≦ 6	6 < L ≦ 30	30 < L ≦ 120	120 < L ≦ 400	400 < L ≦ 1000
TOL A	±0.05	±0.1	±0.15	±0.2	±0.3
TOL B	±0.1	±0.2	±0.3	±0.5	±0.8

LENGTH TOL