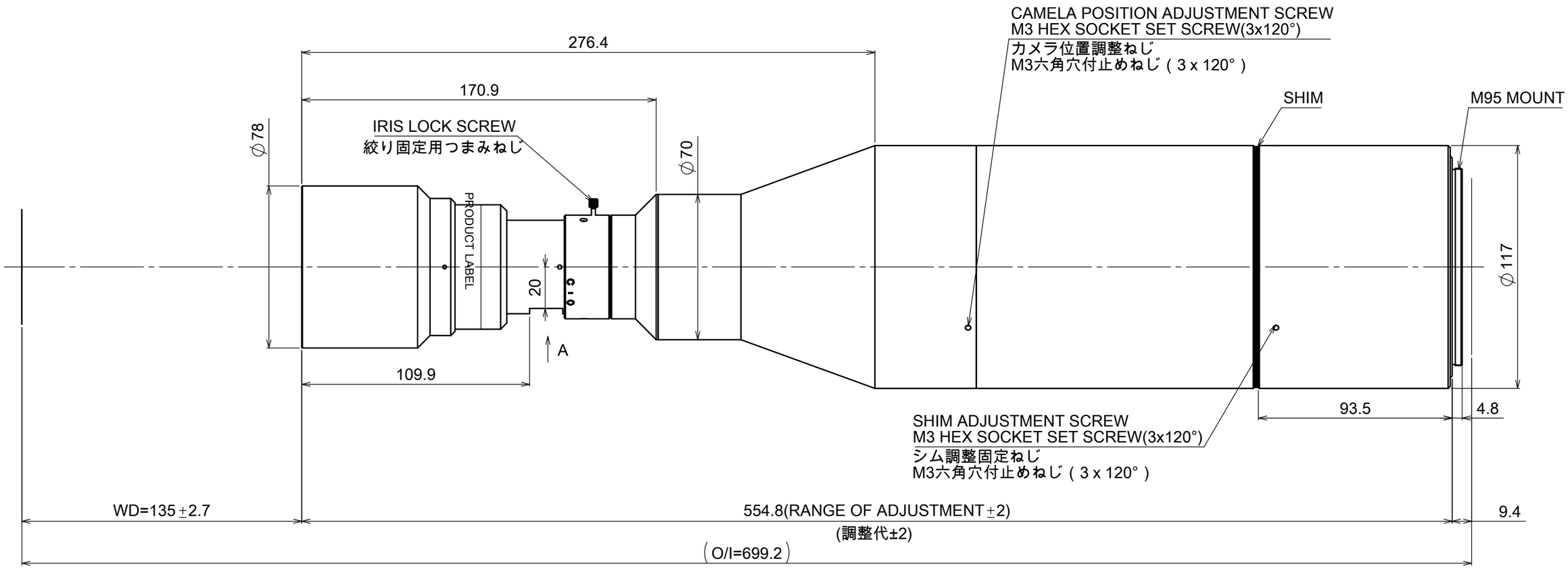

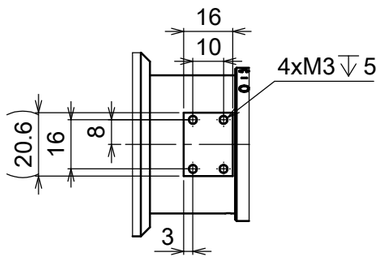

VIEW A

MAGNIFICATION:1.49X
光学倍率:1.49X

Model Name : MTL-5582M95-149
MORITEX CORPORATION