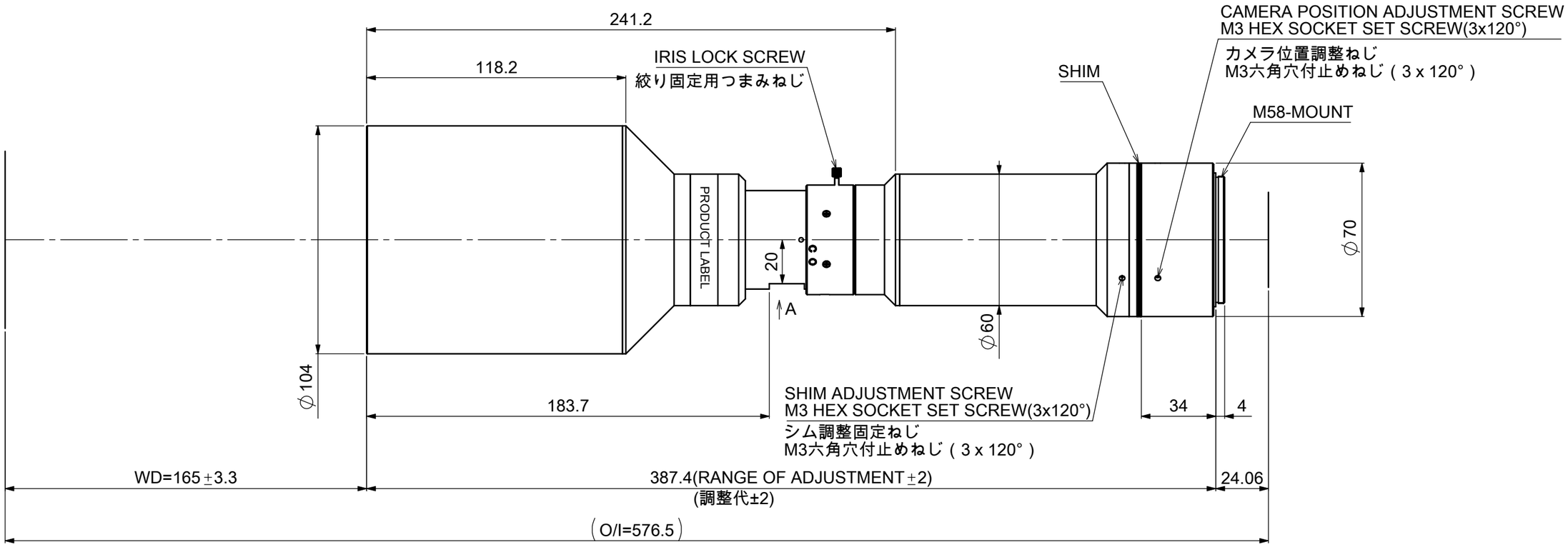

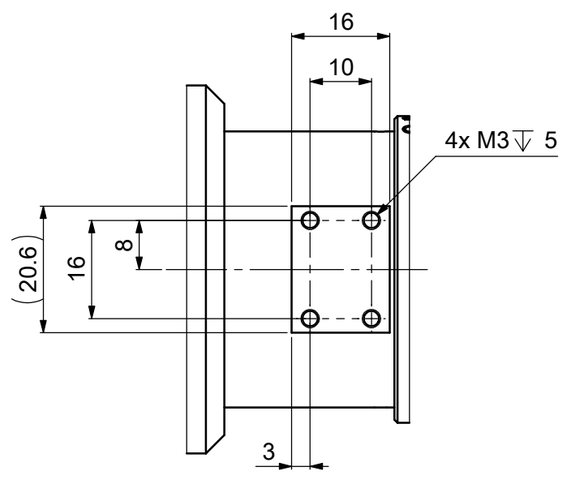

VIEW A

MAGNIFICATION:0.54X
光学倍率:0.54X

Model Name : MTL-8043M58-054
MORITEX CORPORATION