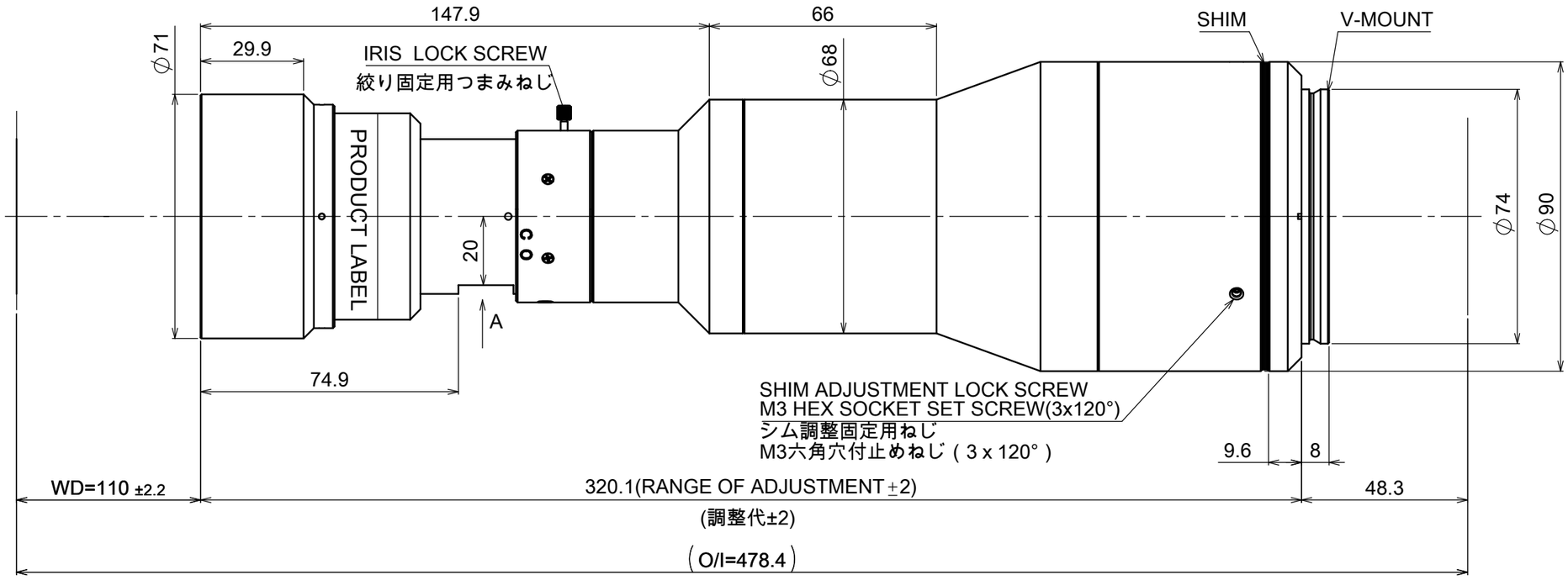

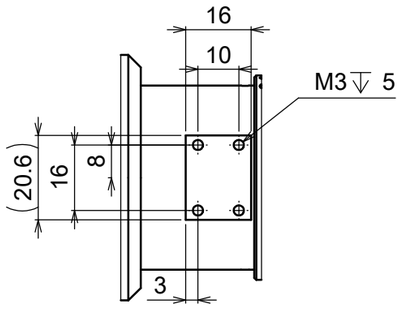

VIEW A

MAGNIFICATION:1.27X
光学倍率:1.27X

Model Name : MTL-4557V74-127
MORITEX CORPORATION