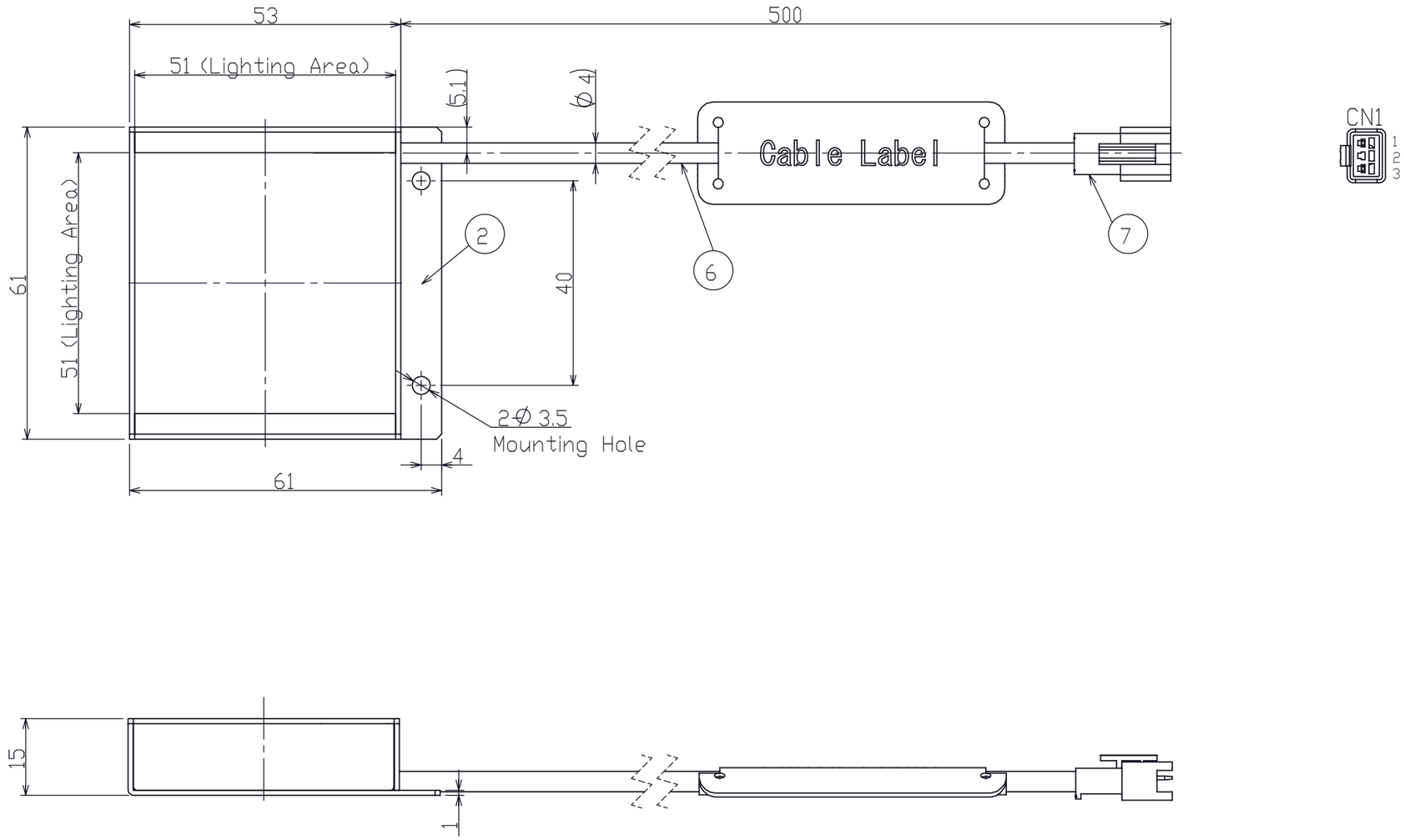

Model Name : CV-NFL-51X51#
MORITEX CORPORATION