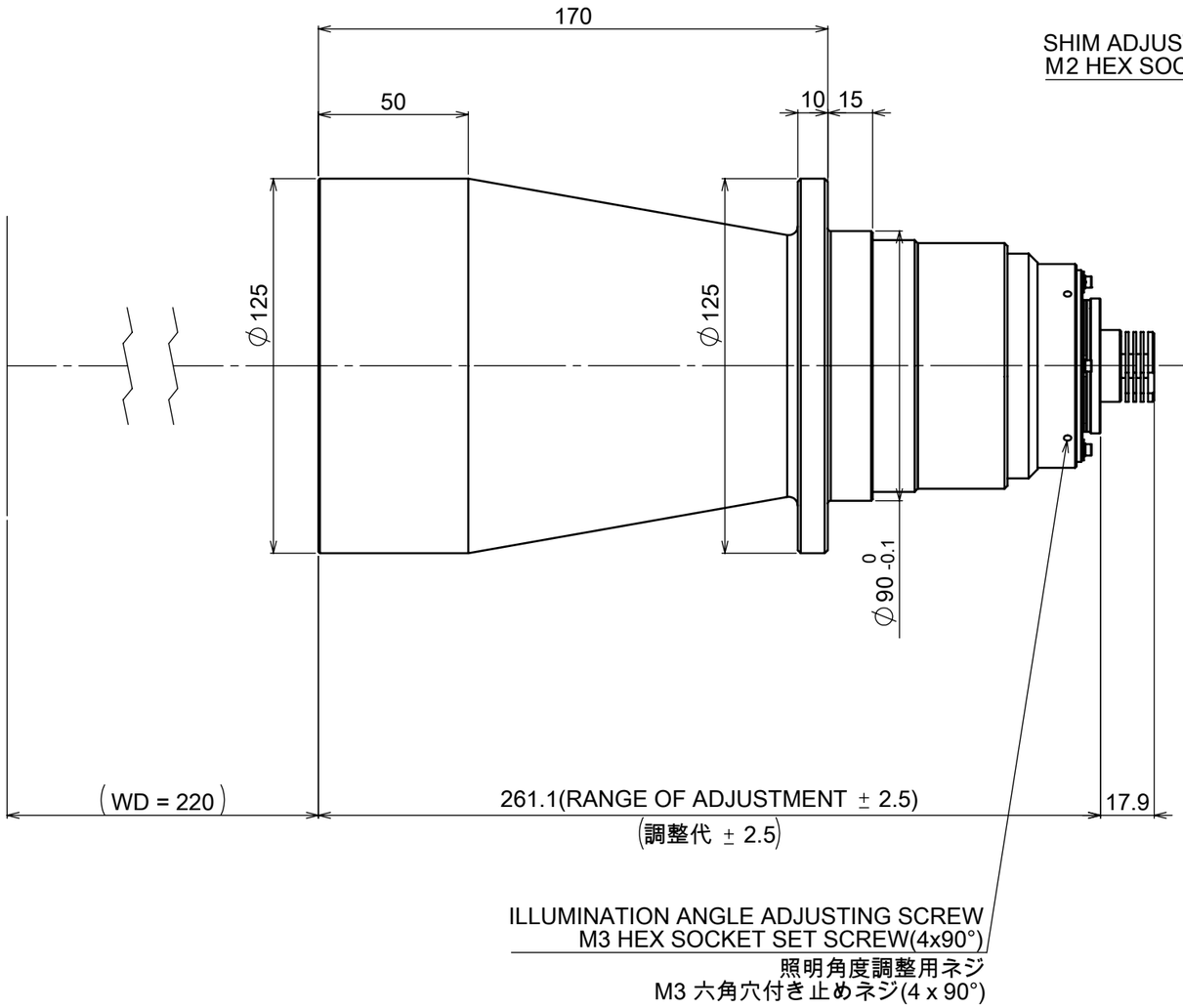

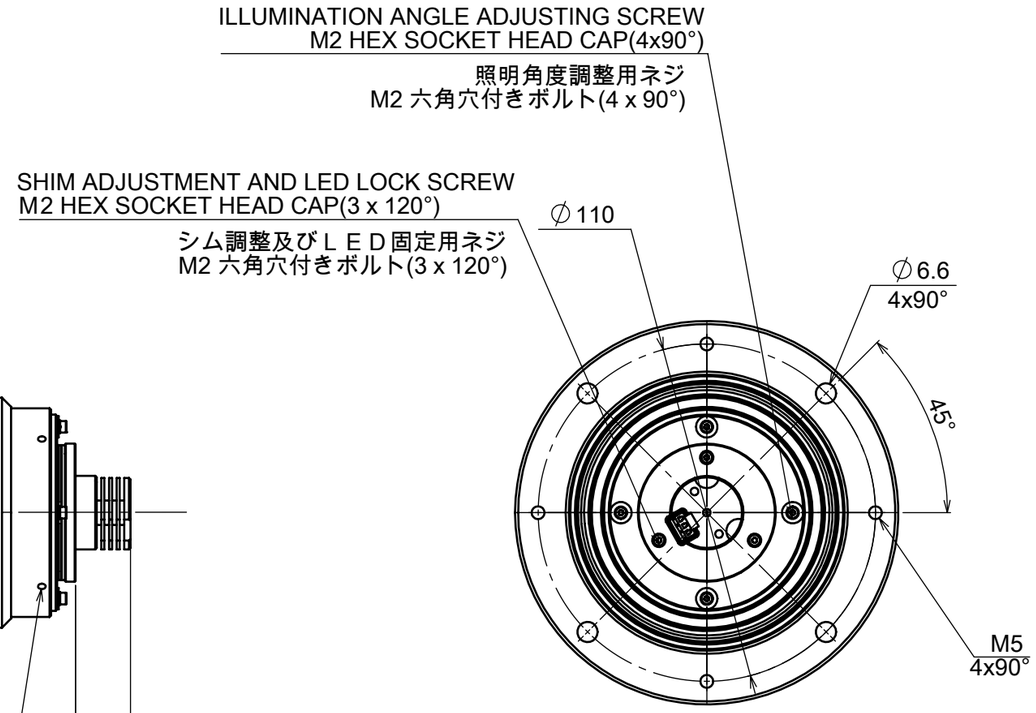

MOUNTING PORTION
DETAIL VIEW

フランジ取付部詳細

MODEL NAME : MTI-100-CG-070
MORITEX Corporation