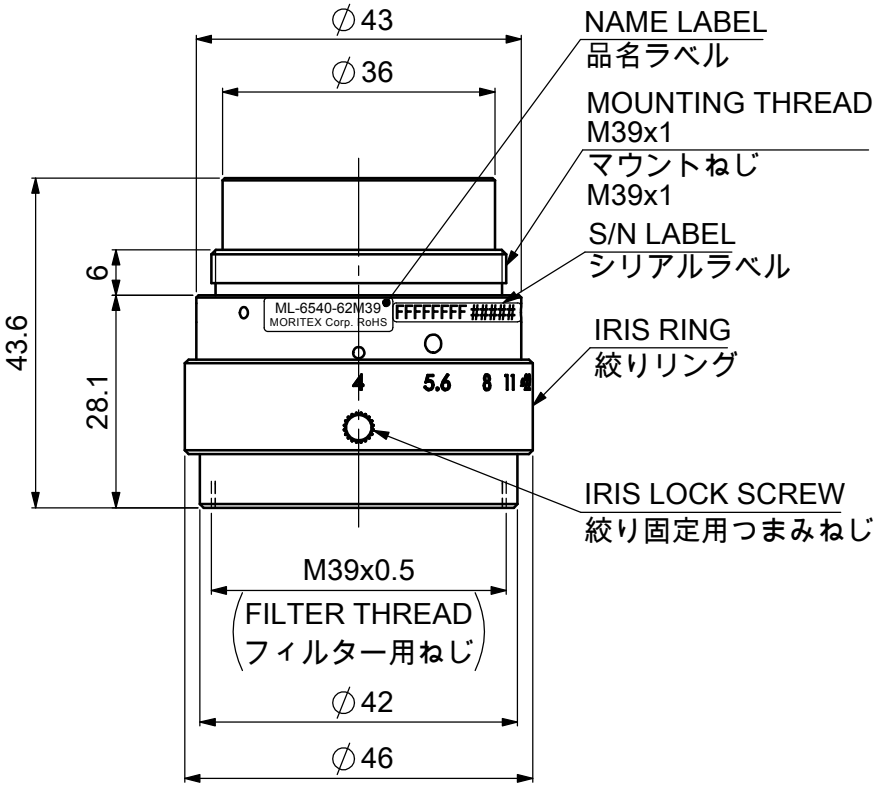

FOCAL LENGTH: 65mm
Fno: 4 ~ 22

Model Name : ML-6540-62M39
MORITEX CORPORATION